Environmental Protection Plan

Line 5 Wisconsin Segment: Relocation Project

December 2019

Version: 0
Version Date: 12/17/2019

TABLE OF CONTENTS

INTRODUCTION 1
1.0 CONSTRUCTION LINE LIST AND PERMITS 2
2.0 RIGHT-OF-WAY REQUIREMENTS 2
3.0 IDENTIFICATION OF RESOURCES AND ENVIRONMENTALLY SENSITIVE AREAS 2
4.0 CONTROLLING SPREAD OF UNDESIRABLE SPECIES 2
5.0 POTHOLING/HYDROVAC SLURRY 3
6.0 WET WEATHER CONSIDERATIONS 3
7.0 CLEARING AND GRADING 3
7.1 DISPOSAL OF NON-MERCHANTABLE TIMBER 4
7.2 DISPOSAL OF MERCHANTABLE TIMBER 4
7.3 STUMP REMOVAL 4
7.4 CLEARING AND GRADING ADJACENT TO WATERBODIES 4
7.5 GRADING IN A WETLAND 4
8.0 EROSION AND SEDIMENT CONTROLS 5
8.1 RIGHT-OF-WAY ACCESS 5
8.2 TEMPORARY EROSION AND SEDIMENT CONTROLS 5
8.3 SILT FENCE, STRAW BALES, & BIOLOGS 6
8.4 TEMPORARY STABILIZATION 6
8.5 EROSION CONTROL BLANKET 6
8.6 MULCH 6
8.7 CAT TRACKING 6
8.8 DRAIN TILE INLET PROTECTION 7
8.9 TEMPORARY AND PERMANENT SLOPE BREAKERS 7
8.10 NOISE AND DUST CONTROL 7
9.0 TOPSOIL SEGREGATION 7
9.1 TOPSOIL SEGREGATION METHODS 7
9.2 DEPTH OF TOPSOIL STRIPPING 8
10.0 TRENCHING 8
11.0 TRENCH BREAKERS 8
12.0 CONCRETE COATING 9
13.0 DRAIN TILE REPAIRS 9
14.0 BACKFILLING 10
15.0 CLEANUP 10
16.0 SOIL COMPACTION TREATMENT 10
17.0 ROCK REMOVAL 11
18.0 REPAIR OF DAMAGED CONSERVATION PRACTICES 11
19.0 LAND LEVELING FOLLOWING CONSTRUCTION 11

20.0 OFF-ROAD VEHICLE CONTROL 11
21.0 REVEGETATION & MONITORING 11
21.1 PROJECT SEED SPECIFICATIONS 11
21.2 TEMPORARY REVEGETATION 12
21.3 TIMING FOR TEMPORARY VEGETATION 12
21.4 PERMANENT REVEGETATION 12
21.5 UPLAND CONSTRUCTION AREAS 13
21.6 WETLAND AREAS 13
21.7 WATERBODY BANKS 13
21.8 SPECIALIZED SEED MIXES 13
21.9 SEED BED PREPARATION AND SEEDING PROCEDURES 13
21.10 SEEDING METHODS 13
21.10.1 Drill Seeding 14
21.10.2 Broadcast Seeding 14
21.10.3 Hydroseeding 14
21.11 COMPANION CROPS 14
21.12 SOIL AMENDMENTS 14
21.13 SEEDING PERIODS 15
21.14 TIMING OF FINAL SEEDING 15
21.15 DORMANT SEEDING 15
21.16 MANAGEMENT AND MONITORING 15
22.0 CONSTRUCTION THROUGH ORGANIC FARMS 16
23.0 STREAM AND RIVER CROSSING GENERAL REQUIREMENTS 16
23.1 TIME WINDOW FOR CONSTRUCTION 16
23.2 BRIDGES 17
23.2.1 Types of Bridges 17
23.2.2 Bridge Design and Maintenance 17
23.2.3 Bridge Removal 17
23.3 STREAM AND RIVER CROSSING CONSTRUCTION METHODS 17
23.3.1 Wet Trench Method 17
23.3.2 Dam and Pump Method 18
23.3.3 Flume Method 20
23.3.4 Directional Drill and/or Guided Bore Method 21
23.3.5 Swales & Intermittent Streams/Agricultural Ditches 21
23.3.6 Supplemental Bank Stabilization 21
24.0 WETLAND CROSSING GENERAL REQUIREMENTS 22
24.1 RIGHT-OF-WAY STABILIZATION 22
24.2 PIPELINE INSTALLATION 22

24.2.1 Push/Pull Method 22
25.0 CONSTRUCTION DEWATERING 23
25.1 TRENCH DEWATERING 23
25.1.1 Flow Measurement and Water Sampling 24
25.1.2 Regulatory Notification and Reporting 24
25.2 HYDROSTATIC TEST DISCHARGES 24
25.2.1 Refueling 24
25.2.2 Siting of Test Manifolds 24
25.2.3 Water Sampling 24
25.2.4 Best Management Practices 24
26.0 WATER APPROPRIATION 25
26.1 GENERAL 25
26.2 WATER SOURCES 25
26.3 FLOW MEASUREMENT 25
26.4 WATER SAMPLING 25
26.5 REGULATORY NOTIFICATION AND REPORTING 25
27.0 WINTER CONSTRUCTION 25
28.0 WASTE MANAGEMENT 26
28.1 HAZARDOUS WASTES 27
28.2 ABRASIVE BLAST DEBRIS 27
29.0 SPILL PREVENTION, CONTAINMENT, AND CONTROL MEASURES 27
29.1 PLANNING AND PREVENTION 27
29.2 ROLES AND RESPONSIBILITIES 27
29.2.1 Spill Coordinator 27
29.2.2 Environmental Inspector 28
29.3 TRAINING 28
29.4 EQUIPMENT 28
29.5 SUPERVISION AND INSPECTION 29
29.6 STORAGE AND HANDLING OF FUELS/HAZARDOUS LIQUIDS 29
29.6.1 Fuel Storage - General 29
29.6.2 Refueling 29
29.6.3 Refueling, Maintenance, and Fuel Storage near Wetlands and Waterbodies 29
29.6.4 Overnight parking 30
29.7 INITIAL SPILL MANAGEMENT 30
29.7.1 Immediate Response 30
29.7.2 Mobilization 31
29.8 SPILL NOTIFICATION RESPONSIBILITIES 31
29.8.1 Notification Volumes 31
29.8.2 Spill Report Form 31
29.8.3 Agency Notification 31

29.9 SPILL CONTAINMENT AND CLEANUP 31
29.9.1 Spill Control - Upland Areas 31
29.10 SPILL CONTROL - WETLANDS AND WATERBODIES 32
29.11 STORAGE AND DISPOSAL OF CONTAMINATED MATERIALS 32
30.0 DRILLING FLUID RESPONSE, CONTAINMENT, AND NOTIFICATION PROCEDURES 32
30.1 ON-SITE OBSERVATION DURING CONSTRUCTION 33
30.2 CONTAINMENT, RESPONSE, AND CLEAN-UP EQUIPMENT 33
30.3 RESPONSE 34
30.4 CLEAN-UP 34
30.5 RESTORATION AND POST-CONSTRUCTION MONITORING 35

FIGURES

Figure 1 Typical Topsoil Segregation – Full Right-of-Way
Figure 2 Typical Topsoil Segregation – Trench Line Only
Figure 3 Typical Topsoil Segregation – Modified Ditch Plus Spoil Side
Figure 4 Typical Silt Fence Installation
Figure 5 Typical Straw Bale Installation
Figure 6 Typical Bio-log Installation
Figure 7 Typical Erosion Control Blanket Installation
Figure 8 Typical Cat Tracking
Figure 9 Typical Temporary or Permanent Berms – Perspective View
Figure 10 Typical Temporary or Permanent Berms – Elevation View
Figure 11 Permanent Slope Breakers – Perspective View
Figure 12 Typical Span Type Bridge With and Without Instream Support
Figure 13 Typical Rock and Flume Bridge
Figure 14 Typical Waterbody Crossing – Wet Trench Method
Figure 15 Typical Waterbody Crossing – Dam and Pump Method
Figure 16 Typical Waterbody Crossing – Flume Method
Figure 17 Typical Final Stream Bank Stabilization – Rip Rap & Erosion Control
Figure 18 Typical Wetland Crossing
Figure 19 Typical Dewatering Measures
Figure 20 Straw Bale Dewatering Structure

APPENDICES

Appendix A Equipment Cleaning Log
Appendix B Seed Mixes
Appendix C Emergency Response Contractors/Disposal and Treatment Facilities
Appendix D Spill Report Form
Appendix E Spill Reporting-Agency Contacts

INTRODUCTION

This Environmental Protection Plan (EPP) outlines construction-related environmental policies, procedures, and protection measures Enbridge developed as a baseline for construction. Enbridge developed this EPP based on its experience implementing Best Management Practices (BMPs) during construction, as well as the Federal Energy Regulatory Commission's (FERC's) Upland Erosion Control, Revegetation, and Maintenance Plan (May 2013 Version) and Wetland and Waterbody Construction and Mitigation Procedures (May 2013 Version). It is intended to meet or exceeds federal, state, and local environmental protection and erosion control requirements, specifications, and practices. The EPP addresses typical circumstances that may occur along the Project. Project-specific permit conditions and/or landowner agreements may supersede the general practices described in this document.

Alternative construction procedures implemented in lieu of this EPP will provide an equal or greater level of protection to the environment, and require advance approval from Enbridge. Unless otherwise specified, the construction Contractor (Contractor) is responsible for implementing the requirements of this EPP.

Enbridge will provide construction oversight to monitor compliance with the measures of this EPP and requirements of applicable permits. Enbridge's Environmental Inspectors (EIs) will assist the Contractor in interpreting and implementing the requirements of the EPP, and verify compliance with these procedures for Enbridge. The EIs will interpret environmental conditions and requirements, and will coordinate and consult with Project management staff to address unforeseen situations should they occur in the field. The EI, in consultation with Enbridge Environment staff, will have the authority to stop activities and order corrective mitigation for actions that are not in compliance with the measures in this EPP, landowner agreements, or environmental permit requirements.

1.0 CONSTRUCTION LINE LIST AND PERMITS

Enbridge will provide the Contractor with a Construction Line List (CLL) that describes special requirements (e.g., timber salvage, topsoil segregation, restoration measures, fencing requirements, etc.) as agreed upon with landowners provided the special requirements conform to Project permits. The Contractor will comply with these special requirements and/or permit conditions.

The CLL identifies requirements and comments provided by landowners; however it is not a comprehensive list of construction requirements. The CLL will be considered in conjunction with other Project documents and permits. Permit requirements supersede landowner preferences, unless the permit defers to the landowner.

2.0 RIGHT-OF-WAY REQUIREMENTS

All construction equipment and vehicles will be confined to the approved construction right-of-way (ROW) and additional temporary workspace (ATWS). Construction activities are restricted to the approved designated areas.

The construction ROW (i.e., construction workspace) for the Project will vary and may include the permanent ROW, temporary workspace, and ATWS as defined below and shown in Figures 1 through 3, 14 through 16, and 18.

- ROW (Permanent): The permanent ROW is the portion of the construction ROW that Enbridge maintains to facilitate access and aerial inspection of the pipeline system.

- Temporary Workspace: In addition to the permanent ROW, construction requires Temporary Workspaces (TWS). The TWS is adjacent to and contiguous with the proposed permanent ROW.

- ATWS: Site-specific ATWS is necessary at select locations such as steep slopes, road, waterbody, railroad, some wetland crossings, and to cross under the existing pipelines or foreign utilities. ATWS is typically in uplands adjacent to the construction ROW and at least 50 feet away from wetland boundaries and the ordinary high water mark/ordinary high water level (OHWM/OHWL) of waterbodies except where the adjacent upland consists of cultivated or rotated cropland or other disturbed land. If safe work practices or site conditions do not allow for a 50-foot setback at a waterbody, Enbridge designs ATWS areas no closer than 20 feet from the OHWM/OHWL of a waterbody. In some areas, Enbridge designs ATWS closer and within wetland resource boundaries.

Prior to commencement of clearing operations, Enbridge will mark the outer limits of the construction ROW and ATWS.

3.0 IDENTIFICATION OF RESOURCES AND ENVIRONMENTALLY SENSITIVE AREAS

Enbridge will post signs identifying the boundaries of sensitive resource areas, waterbodies, wetlands, or areas with special requirements along the construction work area.

4.0 CONTROLLING SPREAD OF UNDESIRABLE SPECIES

It is Enbridge's intent to minimize the potential introduction and/or spread of undesirable species (i.e., invasive species, noxious weeds, or crop diseases) along the construction ROW due to pipeline

construction activities. However, it is not practicable for Enbridge to eradicate undesirable species that are on or adjacent to the construction ROW.

To prevent the introduction of identified noxious weeds and invasive species to the Project, construction equipment will be cleaned prior to arriving on site. The Contractor(s) will keep logs documenting the cleaning history of each piece of equipment and make the logs available to the EI upon request. Contractors may use the equipment cleaning log provided in Appendix A or an equivalent form approved by Enbridge. In the event that equipment and/or material arrives onsite that Enbridge deems not to be clean, the Contractor will be responsible for cleaning the equipment and/or materials (at an Enbridge approved site). The Contractor will be responsible for the proper disposal of all visible dirt and loose materials at an Enbridge approved facility.

To prevent the spread of noxious weeds and invasive species during construction Enbridge will minimize the time duration between final grading and permanent seeding. In addition, mulch used on the Project will consist of weed-free material. The Contractor(s) will be responsible for identifying and acquiring sources of weed-free mulch. Sources will be approved by Enbridge prior to purchase.

5.0 POTHOLING/HYDROVAC SLURRY

Hydrovac excavation may be used to positively identify pipelines and other buried utilities. Hydrovac slurry will be stored in an Enbridge-approved subsoil area using an unlined bermed containment or a topography-contained area within the construction workspace. Final disposal of hydrovac slurry will occur at an Enbridge-approved upland subsoil area within the construction workspace or at an off-site approved disposal facility. Enbridge does not allow discharge of hydrovac slurry on to topsoil.

6.0 WET WEATHER CONSIDERATIONS

This EPP contains best management practices for construction to continue during most wet weather conditions. BMP examples include but are not limited to full topsoil segregation in agricultural areas, dewatering requirements, and agriculture area compaction relief. However, Enbridge may suspend certain activities during construction in wet soil conditions, based on consideration of the following factors:

- extent of surface ponding;
- extent and depth of rutting and mixing of soil horizons;
- areal extent and location of potential rutting and compaction (i.e., can traffic be rerouted around wet area); and,
- type of equipment and nature of the construction activity proposed.

The Contractor will cease work of the applicable activity until Enbridge determines that site conditions are such that work may continue. The EIs, in collaboration with Enbridge construction management, will ultimately decide if wet weather shutdown of a construction activity is necessary in a given location.

7.0 CLEARING AND GRADING

The initial stage of construction involves the clearing of brush, trees, and tall herbaceous vegetation from the ROW. Clearing may be accomplished with chain saws, mowers, and hydraulic tree-cutting equipment.

7.1 DISPOSAL OF NON-MERCHANTABLE TIMBER

Disposal of non-merchantable timber and slash will occur by mowing, chipping, grinding, and/or hauling off site to a disposal facility or being used in stabilizing erodible slopes or construction entrances.

In non-agricultural, non-wetland areas, chips, mulch, or mechanically cut woody debris may be uniformly broadcast across the ROW where the material would ultimately be incorporated into the topsoil layer during grading activities, with landowner approval (coordinated through Enbridge ROW agents).

Vegetation and trees within wetlands will be cut off at ground level, leaving existing root systems intact; clearing debris will be removed from the wetland for disposal. Hydro-axe debris, or similar can be left in the wetland if spread evenly in the construction ROW to a depth which will allow for normal revegetation, as determined by the EI.

Burning of non-merchantable wood may be allowed only where the Contractor has acquired all applicable permits and approvals (e.g. agency, landowner) and in accordance with all applicable regulations. The Contractor will provide Enbridge with copies of these permits and/or approvals prior to initiating burning.

7.2 DISPOSAL OF MERCHANTABLE TIMBER

All merchantable timber will be managed in accordance with landowner and/or Contractor agreements.

7.3 STUMP REMOVAL

To facilitate proper cleanup and restoration in upland areas, tree stumps outside the ditch line will be ground below normal ground surface or completely removed and hauled off to an Enbridge-approved disposal facility. Stumps in the ditch line will be completely removed, ground, and hauled to an approved disposal facility.

In wetlands that are not in actively cultivated or rotated cropland, the extent of tree stump removal will be limited to directly over the ditch line. Stumps and root systems from the rest of the construction ROW in wetlands will not be removed, unless Enbridge determines that safety-related considerations require them to do so.

7.4 CLEARING AND GRADING ADJACENT TO WATERBODIES

During initial clearing, a 20-foot buffer (from the OHWM/OHWL) of undisturbed herbaceous vegetation on all stream banks will be left, except where grading is necessary for bridge installation, or where restricted by applicable regulations and/or permit conditions (such as impaired waterways).

Woody vegetation within the 20-foot buffer may be cut and removed during clearing, leaving the stumps and root structure intact. Non-woody vegetation and the soil profile will be left intact until ready to begin trenching the stream crossing. Sediment control measures at the 20-foot buffer line adjacent to streams must be installed and maintained immediately after clearing and prior to initial ground disturbance. This buffer should not be confused with the 50-foot setback required for extra workspace.

7.5 GRADING IN A WETLAND

Grading activities will be confined to the area of the trench. Enbridge will only allow grading outside the trench where required to ensure safety and to restore the construction ROW after backfilling the trench.

8.0 EROSION AND SEDIMENT CONTROLS

8.1 RIGHT-OF-WAY ACCESS

Access to the ROW will be from public roadways and Enbridge-approved private access roads only. Enbridge is responsible for posting signs or other methods to identify approved access roads in the field and to confine access only to the approved roads. Vehicle tracking of soil from the construction site will be minimized by installation and implementation of BMPs such as stone pads, timber mats, reducing equipment/vehicle access to the construction ROW where practicable (off-ROW parking), or equivalent. Installation of stone or timber mat access pads will be in accordance with applicable permits and state/federal specifications. If such BMPs are not adequately preventing sediment tracking onto public roads, street sweeping (or other equivalent means of collecting sediment) will be used. If soil tracking onto a roadway occurs, the accumulated material will be removed from the road and returned to the construction ROW within an upland area as soon as possible, but in no circumstances more than 24 hours after discovery. In addition, soil on roadways cannot be swept, washed, or graded into the road ditch or onto the shoulder.

If the roadside ditch is part of a jurisdictional waterway, Enbridge will obtain a permit from the applicable authority prior to installing the tracking pad or culvert. If permitted in wetlands, Enbridge will limit tracking pads in size to reduce impacts. Tracking pads installed in wetlands will use clean rock placed on geotextile fabric, as approved by an EI and with approval from applicable regulatory agencies. All rock and fabric will be removed from the wetland during cleanup.

8.2 TEMPORARY EROSION AND SEDIMENT CONTROLS

Temporary erosion and sediment control devices (ECDs) will be installed after clearing and prior to grubbing and grading activities at the base of sloped approaches to streams, wetlands, and roads. Temporary ECDs will also be installed at the edge of the construction ROW as necessary. Temporary ECDs may be installed in other areas determined by the EI to slow water leaving the site and prevent siltation of waterbodies and wetlands down slope or outside of the construction ROW (e.g., swales and side slopes). ECDs may also be necessary along the edge of the construction ROW to contain spoil and sediment within the construction ROW through wetlands.

Temporary ECDs will be placed across the entire construction ROW at the base of slopes greater than 5 percent where the base of the slope is less than 50 feet from tile line inlets, drainage ways, wetlands, and/or waterbodies until final stabilization occurs and there is no potential scouring or sediment transport to surface waters. Adequate room will be available between the base of the slope and the sediment barrier to accommodate ponding of water and sediment deposition.

All non-functional ECDs will be repaired, replaced, or supplemented within 24 hours after discovery, or as soon as practicable following discovery. Enbridge may extend the timing in areas where an active one call is not in place to accommodate the one call regulations.

Temporary ECDs installed across the travel lane may be removed during active daytime construction; however, they must be properly reinstalled after equipment passage, or activities in the area are completed for the day. These ECDs must also be repaired and/or replaced prior to inclement weather, when forecasted.

8.3 SILT FENCE, STRAW BALES, & BIOLOGS

Figures 4 through 6 include the installation specifications for silt fence, straw bales, and biologs. If the Contractor uses silt fence, they must remove sediment when the depth reaches one-third of the height.

8.4 TEMPORARY STABILIZATION

Installation of temporary seeding, mulch (straw or hydromulch), and erosion control blanket may be required by Enbridge in certain locations (including topsoil piles) if there are construction delays within a spread of at least 14 days. Enbridge may require the Contractor to install temporary stabilization materials sooner based on site conditions, or as required in Project permits.

8.5 EROSION CONTROL BLANKET

The appropriate class of erosion control blanket will be installed in accordance with manufacture recommendations and/or state Department of Transportation (DOT) specifications when restoring waterbodies, on exposed slopes greater than 30 percent, and other areas as specified by Enbridge (refer to Figure 7). Erosion control blanket installation on exposed slopes will be completed prior to snowfall where practicable; however, construction progress and/or seasonal weather variations may prevent installation prior to the first snowfall.

8.6 MULCH

Enbridge may require mulch (weed free straw, wood fiber hydromulch, or a functional equivalent) to provide temporary stabilization for topsoil/subsoil or during restoration to support revegetation. Enbridge specifically requires mulch on:

- Slopes greater than 5 percent; and
- Dry, sandy areas that can blow or wash away (field decision).

Mulch will be free of noxious weeds, as listed in applicable state laws. The Contractor will be responsible for identifying and acquiring sources of weed-free mulch and receive Enbridge approval prior to purchase.

Mulch will be applied at a rate of 2 tons per acre to cover at least 75 percent of the ground surface, unless otherwise stipulated by permit conditions; and distribution will occur by a mechanical mulch blower or by hand in areas not accessible to the mulch blower. Mulch will be anchored/crimped using a mulch-anchoring tool or disc set in the straight position to minimize loss by wind and water, as site conditions allow. In areas not accessible to a mulch-anchoring tool or too steep for safe operation, liquid tackifiers may be used with advance written approval from Enbridge and following the manufacturer's recommended method and rate of application.

The Contractor can use hydro-mulch and liquid tackifier in place of straw or weed-free hay mulch with prior approval from Enbridge. All hydromulch and liquid tackifier products will be on the applicable state DOT product list. Application rates will be at the manufacturer's recommended rate, equal to or greater than 2 tons per acre of straw mulch.

8.7 CAT TRACKING

Cat tracking may be implemented, based on site conditions (sandy or silt soils), to reduce erosion potential by driving a bulldozer vertically up and down the slope, which results in the tracks being oriented horizontally; creating small speed bumps for water (refer to Figure 8).

8.8 DRAIN TILE INLET PROTECTION

Enbridge will attempt to locate existing drain tile inlets that are located near the construction work area prior to construction and mark using flags. The Contractor will protect located drain tile inlets with the potential to receive stormwater from construction of the Project using the appropriate ECDs until sources with the potential to discharge achieve stabilization. The determination of the specific ECD will be made based on the location of an inlet with respect to the Project area, drainage area from the construction work area to the inlet, topography, vegetation, soils, and accessibility to the inlet. Where drain tile inlets are located off of the construction ROW, Enbridge may not have authorization to install ECDs at the inlet site. In these cases, sediment control measures (typically silt fence) will be installed along the edge of the construction work area that drains to the inlet structure to minimize sedimentation.

8.9 TEMPORARY AND PERMANENT SLOPE BREAKERS

Temporary and permanent slope breakers will be installed to minimize concentrated or sheet flow runoff in disturbed areas in accordance with the maximum allowable spacing included on Figure 9, unless otherwise specified in permit conditions.

If the length of the slope is less than the distance of the required spacing, slope breakers are not necessary unless a sensitive resource area (e.g., wetland or public roadway) is immediately down slope, or as requested by the EI. Temporary slope breakers will be constructed according to the specifications provided in Figures 9 and 10.

With exception for actively cultivated areas, permanent berms (diversion dikes or slope breakers) will be installed on all slopes, according to the requirements provided in Figures 10 and 11, unless otherwise specified in permit conditions

8.10 NOISE AND DUST CONTROL

The Contractor must take reasonable steps to control construction-related noise and dust near residential areas and other areas as directed by Enbridge. Control practices may include wetting the ROW and access roads, limiting working hours in residential areas, reestablishment of vegetation and/or additional measures as appropriate based on site-specific conditions

9.0 TOPSOIL SEGREGATION

Upland areas where topsoil will be stripped include croplands, hay fields, pasture, residential areas, and other areas as requested by the landowner or as specified in the Project plans, commitments, and/or permits. Topsoil will not be used to construct berms, trench breakers, temporary slope breakers, improving or maintaining roads, or to pad the pipe. Berms for stacking pipe in pipe yards may be constructed using topsoil with landowner permission. Gaps will be left where stockpiled topsoil and spoil piles intersect with water conveyances (i.e., ditches, swales, and waterways) to maintain natural drainage and install ECDs.

9.1 TOPSOIL SEGREGATION METHODS

The following topsoil segregation methods will be employed during construction:

- Full Construction ROW (refer to Figure 1)
- Trench-Line-Only (refer to Figure 2)
- Modified Ditch-Plus-Spoil Side (refer to Figure 3)

The Full Construction ROW topsoil segregation technique is typical in active cropland, hayfields, pasture, and residential areas which will consist of stripping topsoil from the spoil storage area, ditch line, and the travel lane to the topsoil storage area. Enbridge utilizes the Trench-Line-Only topsoil segregation method where the width of the construction ROW is insufficient for other methods. Enbridge will utilize the Trench-Line-Only topsoil segregation method in wetlands without standing water. Enbridge does not typically segregate in standing water wetlands unless specifically requested by the landowner and/or managing land agency in accordance with applicable permit conditions.

Enbridge may use alternative topsoil segregation methods, such as Ditch-Plus-Spoil or Modified Ditch-Plus-Spoil Side, in grass and forest areas or as requested by the landowner.

9.2 DEPTH OF TOPSOIL STRIPPING

In deep soils (more than 12 inches of topsoil), topsoil will be stripped to a minimum depth of 12 inches, unless otherwise specified/requested by other plans, permit conditions, or the landowner. Additional space may be necessary for spoil storage for stripping of more than 12 inches of topsoil. If less than 12 inches of topsoil are present, the Contractor will attempt to segregate to the depth that is present.

When constructing in wetland areas without standing water, up to 12 inches of topsoil (organic layer) will be stripped from the trench line and stockpiled separate from trench spoil to preserve the native seed stock. In standing water wetlands, organic soil segregation is not typically practical; however, the Contractor will attempt to segregate as much of the organic layer as possible based on site/saturation conditions.

10.0 TRENCHING

Trenching in uplands typically occurs using a backhoe excavator or a rotary wheel ditching machine. A backhoe is typically used to excavate the trench in wetlands. Excavated material will be side cast (stockpiled) within the approved construction ROW separate from topsoil. Where Enbridge deems appropriate, plugs of subsoil in the ditch will be left or temporary access bridges across the trench will be constructed for the landowner to move livestock or equipment. Trenches may also be sloped where they start and end to allow ramps for wildlife to escape.

Unless Enbridge or Project permits specify otherwise, the Contractor will limit the amount of excavated open trench to a maximum of 3 days of anticipated welding production per spread, per pipe. Enbridge may decrease this timeframe based on site conditions. Site-specific activities such as horizontal directional drilling, guided bores, road bores, tie-in points, and valve work may occur independent of a spread and are not subject to the timeframe restriction.

11.0 TRENCH BREAKERS

Trench breakers slow the flow of subsurface water along the trench. Trench breakers may be constructed of materials such as sand bags or polyurethane foam and will not use topsoil.

Trench breakers will be installed at the base of slopes greater than 5 percent where the base of the slope is less than 50 feet from a waterbody or wetland, and where necessary to avoid draining a waterbody or wetland. Trench breakers will extend (key into) the undisturbed trench walls a minimum of 6 inches, and will be placed from the bottom of the trench to near the top, completely surrounding the pipe. Trench

breakers will not be installed within a wetland. Enbridge Engineering will determine the need for, and spacing of, any additional trench breakers.

12.0 CONCRETE COATING

Concrete will typically be mixed off-site and coated pipe will be transported to the construction ROW on trucks. If required, pre-fabricated concrete weights and/or saddlebag weights may be used to provide negative buoyancy. Limited mixing and coating activities may occur on the construction ROW for coating pipe joints and concrete weight repairs.

Equipment used for mixing, pouring, casting, or coating will not be washed within 100 feet of any wetland or waterbody. Concrete wash water will be contained in a leak-proof containment facility or impermeable liner. The Contractor will provide equipment capable of reclaiming wash water during wash out. The EI will determine where ECDs are necessary down slope of equipment wash areas to capture sediments and minimize erosion from runoff.

13.0 DRAIN TILE REPAIRS

The following requirements apply to the repair of damaged drain tile lines:

- Damaged/cut drain tile lines will be staked or flagged in such a manner that they will remain visible until permanent repairs are made prior to final backfilling of the trench. Enbridge will record the location of damaged, cut, and repaired tile lines using GPS technology or equivalent.

- Screens (or equivalent) will be installed on all damaged drain tile lines to prevent the entry of foreign materials, small mammals, etc.

- If water is flowing through any damaged drain tile line, immediate temporary repair will be completed until such time that permanent repairs can be completed. If the drain tile lines are dry and water is not flowing, temporary repairs are not necessary if the permanent repairs can occur within 14 days of the time the damage occurred.

- Rain events during dry periods can produce flow and require temporary repairs to facilitate draining of the fields to prevent crop damage. Damaged drain tiles will be temporarily or permanently repaired within 48 hours after a one inch rain event, or flow occurs in a previously non-flowing drain tile.

- Permanent repairs shall be made in accordance with the contract specifications. The Contractor will utilize double-walled drain tile and maintain the original alignment and gradient.

- Before completing permanent repairs, the drain tile lines on both sides of the trench will be probed (or examined by other suitable means) for their entire length within the work areas to check for damage by vehicular traffic or construction equipment and repair accordingly.

- Permanent drain tile line repairs shall be made within 14 days of pipeline installation within the trench, weather and soil conditions permitting

14.0 BACKFILLING

Backfilling follows pipe installation and consists of replacing the material excavated from the trench. In areas where topsoil segregation occurred, the subsoil will be replaced and the topsoil spread uniformly over the area from which it was removed. Prior to backfilling, the trench may be dewatered, in accordance with the methods discussed in Section 25.1, if water obscures the trench bottom.

Subsequent to pipe installation, backfilling of wetland trenches will take place immediately, or as approved by EI. Wetlands will be restored as near as practicable to pre-construction conditions and reasonable attempts will be made to return the subsoil to its pre-construction density. During backfilling of wetland areas, subsoil will not be mounded above the height of the adjacent undisturbed trench wall. Subsoil that exceeds the elevation of the ground adjacent to the trench will be removed from the wetland and disposed of in an upland area or an Enbridge-approved disposal site. After the trench is backfilled with subsoil, the previously segregated topsoil will be spread over the trench area and mounded no more than 12 inches above the adjacent, undisturbed soil. In unsaturated wetlands, Enbridge may specify a lower maximum height based on site conditions.

15.0 CLEANUP

All waste materials, including litter generated by construction crews, will be disposed of on a daily basis. Initial cleanup and rough grading activities may take place simultaneously. Cleanup involves removing construction debris (including litter generated by construction crews and excess rock) and large woody debris. Final grading includes restoring disturbed areas as near as practicable to preconstruction conditions, returning the topsoil where stripped, preparing a seedbed and de-compacting subsoil (where applicable) for permanent seeding, installing or repairing temporary ECDs, repairing/replacing fences, and installing permanent erosion controls.

Cleanup (including installation of temporary ECDs) will begin within 72 hours after backfilling the trench. Final grading, topsoil replacement, seeding, and installation of permanent erosion control structures will be completed within 20 days after backfilling the trench (10 days in residential areas). If construction or restoration unexpectedly continues into the winter season conditions prevent compliance with these timeframes, temporary ECDs will be installed and maintained until conditions allow completion of cleanup.

16.0 SOIL COMPACTION TREATMENT

Subsoil compaction on the equipment travel areas of the ROW will be alleviated utilizing a deep tillage device or a chisel plow. Cultivated fields will be decompacted to a subsoil depth of 18 inches; however, closely spaced drain tiles areas may necessitate a shallower depth. All other areas will be decompacted to a subsoil depth of 12 inches. Decompaction in most cases will occur prior to topsoil placement. Seasonal conditions may necessitate replacing the topsoil prior to alleviating subsoil compaction. In these areas, decompaction depths will be increased by the topsoil depth. The presence of stumps and roots may preclude the activity in forested areas where ditch plus spoil segregation occurred.

If subsequent construction and cleanup activities result in further compaction, additional measures to alleviate the soil compaction will be performed.

17.0 ROCK REMOVAL

Rock removal will occur in cultivated areas, hayfields, pastures, and residential areas, as well as other areas at the landowner's request. A diligent effort will be made to remove excess stones equal to or larger than 4 inches in any dimension from the upper 4 inches of the subsoil, or as specified in permit conditions or landowner requirements. Rock removal will occur after soil decompaction. In the same areas after topsoil replacement, rock removal will continue until the size and density of stones greater than 4 inches in any dimension are similar to undisturbed areas adjacent to the ROW.

Rocks removed from the ROW may be piled in upland areas with landowner permission, or hauled off-site to an Enbridge-approved disposal site.

18.0 REPAIR OF DAMAGED CONSERVATION PRACTICES

All soil conservation practices (such as terraces, grassed waterways, etc.) that are damaged by the pipeline construction will be restored to preconstruction conditions to the extent practicable.

19.0 LAND LEVELING FOLLOWING CONSTRUCTION

Following the completion of the pipeline, the construction ROW will be restored to its pre-construction conditions, as practicable. Should uneven settling or documented surface drainage problems occur following the completion of pipeline construction and restoration, Enbridge will take appropriate steps to remedy the issue.

20.0 OFF-ROAD VEHICLE CONTROL

Enbridge will install and maintain measures to control unauthorized vehicle access to the ROW upon completion of restoration activities at the request of the landowner. Such measures may include installing fences and gates, or placement of other barriers such as boulders or timbers.

21.0 REVEGETATION & MONITORING

Enbridge developed this section in conjunction with Natural Resources Conservation Service (NRCS) guidelines. Project-specific permit conditions and landowner requests (with exception to wetlands) for specific seed mixes (as indicated in the Project CLL) take precedence over this section.

21.1 PROJECT SEED SPECIFICATIONS

Seed will be purchased on a Pure Live Seed (PLS) basis. Seed tags will identify:

- purity;
- germination;
- date tested;
- total weight and PLS weight;
- weed seed content; and
- seed supplier's name and business information.

Seed will be used within 12 months of testing as required by applicable state rules and regulations. The seed tags on the seed sacks will also certify that the seed is "Noxious Weed Free". Seed rates for the Project assume a PLS rate, not actual weight basis. Therefore, to determine the correct application rate if not indicated on the seed tag, a correction calculation will be performed based the purity and

germination. For example, a seed mix that has a specified 10 pounds PLS per acre, 95 percent germination rate, and is 80 percent pure needs to be applied at the following rate:

(95% germination × 80% purity)/100 = 76% PLS
10 pounds PLS per acre/.76% PLS = 13.2 pounds per acre actual seeding rate

The species components of individual mixes are subject to availability at the time of purchase. Grass species may be substituted with alternative native or non-invasive species that are included in the NRCS guidelines and with Enbridge approval.

During seeding activities, seed tags shall be collected and provided to Enbridge. The EI will review tags prior to installation to ensure that the seed mix complies with Enbridge's specifications and that the seed is being applied to the correct location. If bulk delivery of seed occurs, the above information will still be made available to Enbridge. Off-loading/on-loading of seed will not occur in a designated wetland area.

Legume seed (if used) will be treated with an inoculant specific to the species and in accordance with the manufacturer's recommended rate for the seeding method (broadcast, drill, or hydroseeding). When hydroseeding, four times the manufacturer's recommended rate of inoculant will be used.

21.2 TEMPORARY REVEGETATION

Unless specifically requested by landowners or land managing agencies, Enbridge does not intend to establish temporary vegetation in standing water wetlands and/or other standing water areas.

21.3 TIMING FOR TEMPORARY VEGETATION

Temporary revegetation may be established in construction work areas where 14 days or more will elapse between:

- the completion of final grading at a site and the establishment of permanent vegetation; and/or,
- where there is a high risk of erosion due to site-specific soil conditions and topography.

Enbridge may require the Contractor(s) to conduct temporary seeding sooner than 14 days at site-specific locations near sensitive resource areas and/or areas prone to wind/water erosion.

Temporary vegetation will be established at any time between **April 1 and September 1**. Attempts at temporary revegetation after this date should be assessed on a site-specific basis and with Enbridge approval.

21.4 PERMANENT REVEGETATION

Permanent vegetation will be established in areas disturbed within the construction work area (permanent easement, TWS, and ATWS), except in actively cultivated areas and standing water wetlands. The seed mixes for permanent seeding include native seed varieties commonly found and/or available from local seed distributors. Enbridge selected seed mixes (refer to Appendix B) to augment revegetation via natural recruitment from native seed stock in the topsoil and are not intended to change the natural species composition. Rates provided assume a drill application and will be adjusted as discussed in Section 21.1.

21.5 UPLAND CONSTRUCTION AREAS

Appendix B includes Enbridge's standard upland seed that include species that will provide for effective erosion control and revegetation of the Project area. This seed mix will be used in upland areas unless a landowner or land managing agency specifies otherwise.

21.6 WETLAND AREAS

Non-standing water wetlands will be seeded using the mix provided in Appendix B to provide temporary cover and allow natural revegetation via the seeds and rhizomes in the topsoil spread back over the ROW after pipe installation. No fertilizer, lime, or mulch will be applied in wetlands.

Enbridge does not plan to seed standing water wetland areas because the reestablishment of vegetation occurs best through natural process without supplemental seeding.

Enbridge plans to allow natural reforestation of the temporary workspace area within forested wetlands via stump sprouting, root sprouting, and natural recruitment.

21.7 WATERBODY BANKS

Enbridge will reestablish stream bank vegetation using the seed mix provided in Appendix B, unless applicable agencies specify otherwise. Where a waterbody is within a wetland, the banks will be reseeded with the applicable wetland seed mix.

21.8 SPECIALIZED SEED MIXES

Enbridge will provide specialized seed mixes upon landowner request on a site-specific basis for:

- Residential Areas: This seed mix will be used to reestablish residential lawns or other types of "turf-type" land cover.
- Wildlife Areas: This seed mix will be used to provide a desirable food source for wildlife, specifically deer.
- Conservation Reserve Properties: Enbridge will work with the landowners to apply parcel-specific CRP seed mixes when applicable.

21.9 SEED BED PREPARATION AND SEEDING PROCEDURES

Deep tillage will be performed in actively cultivated areas and in non-agricultural areas (as directed by Enbridge) to relieve soil compaction and promote root penetration. Deep tillage will not occur in non-farmed wetlands. The soil will then be tilled with a disc, field cultivator, or chisel plow (or equivalent) to prepare a seedbed, breaking up large clods and firm the soil surface.

Tillage and equipment operations related to seeding and mulching will be performed parallel to ground contours as much as practicable. Fertilizer and other soil amendments will be incorporated into the soil during seedbed preparation per the Project-specific CLL requirements and permits.

21.10 SEEDING METHODS

Seed will be applied uniformly at specified rates across the prepared construction ROW by drilling, broadcasting, hydroseeding, or air seeding. The EI will suspend seeding activities if conditions are such that equipment will cause rutting of the surface in the designated seeding areas. Enbridge will continue

to monitor ROW conditions to resume seeding activities as site conditions improve and according to the general seeding timing restrictions listed in Section 21.3.

21.10.1 Drill Seeding

Seeding equipment will be capable of uniformly distributing the seed and sowing it at the required depth. Drills will have a feeding mechanism that provides a uniform flow of seed at the desired application rate. Double-disc furrow openers, equipped with depth bands and packer wheels to firm the soil over the seed, will be used where practicable.

21.10.2 Broadcast Seeding

Broadcast seeding rate will be double the drill-seeding rate. Seed will be uniformly applied using a mechanical or hand operated seeder. Following seeding, a cultipacker, harrow, or hand rake will be used to cover the seeds and firm the seedbed as is appropriate for the area.

21.10.3 Hydroseeding

Hydroseeding rate will be double the drill seeding rate, or the same as broadcast seeding rate. Seed will be applied alone or in combination with fertilizer and/or hydromulch slurry. If seed is applied alone, the amount of hydromulch material will be adjusted to the seed slurry to show where seeding has taken place, providing a means to identify uniform cover of the construction ROW. Hydroseeders will provide continuous agitation and be capable of supplying a continuous, non-fluctuating flow of slurry. Enbridge will pre-approve all hydromulch products, which must be on the applicable state DOT product list.

21.11 COMPANION CROPS

Enbridge may utilize a companion crop (refer to Appendix B) with the perennial species where soil erosion is a severe hazard. A companion crop may be used with all seed mixes.

Seeding rates for companion crops are lower than normal seeding rates for those crops to reduce competition with the seeded perennial species.

21.12 SOIL AMENDMENTS

Enbridge will consult with NRCS representatives and review county soil survey information to assess where soil amendments, specifically the application of fertilizer or lime may be necessary to promote successful revegetation. Fertilizer or lime will not be used with native seed mixes. When using non-native species on dry, dry-mesic and mesic sites for permanent seeding, lime and fertilizer will be applied at rates appropriate based on the soil pH conditions. Soil amendments may be applied to agricultural, pasture, and/or residential lands at the request of landowners and/or land managing agencies. Enbridge will apply phosphate free fertilizers to areas within 100 feet of a waterway if soil amendments are necessary.

21.13 SEEDING PERIODS

Recommended seeding dates in the table below are based on climatic records, research, and experience; and they also represent optimum periods for the germination of grass and legumes. The dates below provide adequate development of adventurous roots prior to stressful periods.

Recommended Seeding Dates	
Species Type and Season of Planting	**Recommended Dates**
Cool Season Species Spring Late Summer Late fall dormant seeding	Prior to May 20 August 10 to September 1 Typically November 1 and later
Warm Season Species Spring	May 10 to June 25
Warm/Cool Season Mix Spring	May 1 to June 14

Enbridge may delay seeding during frozen ground conditions until the applicable spring seeding period or will complete dormant seeding where conditions allow (i.e., no snow cover). Enbridge will install temporary ECDs during frozen conditions.

21.14 TIMING OF FINAL SEEDING

Upon final grading of the construction ROW, and upon the restoration of wetland and waterways, seeding and restoration/stabilization will occur within 48 hours if weather and soils conditions allow. Other methods of stabilization will be used if temporary seeding is not appropriate due to seasonal conditions (e.g., mulch, erosion control blanket).

21.15 DORMANT SEEDING

Dormant seeding is a method used after soil temperatures cool to 55 degrees Fahrenheit or cooler to prevent germination. Dormant seeding is only practicable if the soil is not frozen and snow is not present. Procedures for applying soil amendments, seedbed preparation, seeding, and mulching are the same as outlined for permanent revegetation in this section.

Where dormant seeding is conducted, one or more of the following temporary ECDs will be installed within 48 hours of seeding, unless the local soil conservation authority, landowner, or land managing agency specifies otherwise:

- noxious weed-free straw mulch, at not more than 2 tons/acre, anchored;
- hydromulch, at 2 tons/acre, anchored; and/or
- erosion control blanket.

Additional ECDs will be applied at the request of the EI.

21.16 MANAGEMENT AND MONITORING

Enbridge will monitor restored areas in accordance with conditions identified in the applicable Project permits and/or licenses.

22.0 CONSTRUCTION THROUGH ORGANIC FARMS

Pipeline construction through Organic farms certified or presently considered for certification under the National Organic Program (NOP) requires special consideration during construction. Therefore, Enbridge will prepare site-specific Organic Crossing Plans that will include by reference construction protocols provided in this EPP for pre-construction clearing, ROW preparation, construction, and post construction reclamation. Enbridge will document modifications to these practices to accommodate specific organic farm certification and farming practices in the Organic Crossing Plan. As such, Organic Farm crossing plans are site specific and Enbridge will provide, as necessary, as a supplement to this EPP.

23.0 STREAM AND RIVER CROSSING GENERAL REQUIREMENTS

The procedures in this section apply to streams, rivers, and other waterbodies such as jurisdictional ditches, ponds, and lakes.

Stream crossing requirements, including construction methods, timing, erosion control, and restoration are described in this section and in the stream crossing permits issued by state and federal agencies and by tribal authorities (as applicable). During wet and high runoff conditions, the EI will determine whether conditions warrant additional considerations for construction activities.

23.1 TIME WINDOW FOR CONSTRUCTION

All in-stream work activities (installation of dams, sheet piling, etc.) will be within the construction workspace reviewed and approved by the permitting agencies. In-stream trenching will be conducted during periods permitted by the appropriate regulatory agencies and applicable permits. Unless otherwise specified in applicable permits and with exception to blasting and other rock breaking measures and directional drill, in-stream construction activities (specifically trenching, pipeline installation, backfill, and restoration of the streambed contours) for wet crossing methods will occur within the following timeframes:

- Minor Waterbodies (all waterbodies less than or equal to 10 feet wide at the water's edge at the time of crossing): 24 hours

- Intermediate Waterbodies (all waterbodies greater than 10 feet wide but less than 100 feet wide at the water's edge at the time of crossing): 48 hours

- Major Waterbodies (all waterbodies greater than 100 feet wide at the time of crossing): As specified by Enbridge or in the applicable permits.

These timeframes apply when flow is present. These timeframes also apply to dry crossing methods as a guideline that Enbridge Environment staff, Construction Management, and the EI can extend based on site-specific conditions.

Enbridge designed stream crossings as close to perpendicular to the axis of the stream channel as engineering and routing constraints allow, creating the shortest crossing length. Clearing and grading near waterbodies will occur in accordance with Section 7.4.

23.2 BRIDGES

Temporary equipment bridges will be used on most waterways (upon approval by the appropriate agency), including small waterways such as ditches and intermittent streams, where there is a potential for stormwater runoff or rain events to transport sediment downstream. Bridges will be constructed as described below and will be removed as soon as possible during final restoration. Bridges will not typically be installed at directionally drilled waterbodies, unless there is no reasonable alternative that provides an efficient, economical way to transport heavy construction equipment around the waterbody by truck.

With exception to clearing-related equipment, Enbridge prohibits fording of waterways (i.e. civil survey, potholing, or other equipment are not permitted to ford waterways prior to bridge placement). Enbridge will allow clearing equipment and equipment necessary for installation of equipment bridges a single pass across waterbodies prior to bridge installation, unless restricted by applicable permits.

23.2.1 Types of Bridges

Equipment bridges will be constructed using one of the following techniques:

- Typical Span Type Bridge (timber mats - refer to Figure 12)
- Rock Flume (refer to Figure 13)
- Railroad flat cars
- Flexi-float or other pre-fabricated portable bridges
- Other methods as approved by Enbridge and appropriate agencies

23.2.2 Bridge Design and Maintenance

Bridges will be designed as close to perpendicular to the axis of the stream channel, creating the shortest crossing length, using clean materials, and will be built and maintained in accordance with applicable permits. Equipment bridges will be designed to withstand the maximum foreseeable flow of the stream without restriction or cause pooling. Instream support may be utilized and bridge headers may be keyed into the stream bank. Bridges will be designed and maintained to prevent soil from entering the waterbody and soil that accumulates on the bridge decking will be removed.

23.2.3 Bridge Removal

Equipment bridges will be removed during final cleanup or, if access is necessary, after final cleanup and permanent seeding. Restoration of the bridge area will occur upon bridge removal.

23.3 STREAM AND RIVER CROSSING CONSTRUCTION METHODS

The following stream and river crossing methods will be used, subject to further restrictions by Enbridge and applicable permits.

23.3.1 Wet Trench Method

The wet trench method may be used to cross streams and rivers not permitted using other techniques (flume, dam and pump, or directional drilling) in accordance with the following procedures and Figure 14:

- Install sediment control measures from the 20-foot vegetative buffer left on each stream bank. Install spoil containment structures back from the stream bank so that spoil does not migrate into the stream.

- Grade stream banks and areas necessary for safe bridge and pipeline installation will be within the construction workspace reviewed and approved by the permitting agencies.

- After grading, use backhoes or draglines to excavate the trench. Where possible, excavating equipment will operate from one or both banks, without entering the stream. If equipment must encroach into the stream, it will operate on clean construction mats. Streambed material will be segregated (e.g., upper one foot and the remaining trench spoil will be stored separately) and placed within a spoil containment structure in approved construction work area limits. Storage of streambed spoil within the stream will only occur if expressly approved in the applicable permits.

- Leave earthen trench plugs (hard plugs) between the stream and the upland trench undisturbed during excavation of the in-stream trench to prevent diversion of the stream flow into the open trench and to prevent water from the adjacent upland trench from entering the waterbody. Remove trench plugs immediately prior to pipe placement, and then replace when the pipe is in place. Dewater trench water accumulated upslope of trench plugs in accordance with Section 25.1 prior to trench plug removal. Manage water within the trench in accordance with Section 25.1.

- Backfill the in-stream trench that the stream bottom is as near as practicable to its pre-construction condition, with no impediments to normal water flow. Backfill material will consist of the spoil material excavated from the trench and parent streambed unless otherwise specified in state or federal permits.

- Permanent stabilization will be initiated within 24 hours of backfilling the crossing, which includes restoring the stream banks as near as practicable to pre-construction conditions unless that slope is determined to be unstable. If Enbridge determines that the slope is unstable, the banks will be reshaped to prevent slumping. Once the banks are reshaped, ECDs will be installed within 24 hours of backfilling the crossing. Seed (refer to Section 21.7) and mulch and/or erosion control blankets will be installed within a 50-foot buffer on either side of the stream. Temporary slope breakers will also be installed on all sloped approaches to streams in accordance with Section 8.9.

23.3.2 Dam and Pump Method

The dam and pump method involves damming of the stream upstream and downstream of the trench before excavation (refer to Figure 15) and pumping water around the construction area using the following procedures:

- Construct the dams using sandbags, inflatable dams, aqua-dams, sheet piling, and/or steel plates. The dams will prevent the stream from flowing into the construction area. Continuously monitor the dams for a proper seal. Additional sandbags, plastic sheeting, steel plating, or similar materials may be necessary to minimize the amount of water seeping around the dams and into the construction work area.

- Pumping of the stream across the ROW will commence simultaneously with dam construction to prevent interruption of downstream flow. Pump stream flow across the construction area

through a hose and discharge to an energy-dissipation device, such as plywood boards, to prevent scouring of the streambed.

- Place the pumps and fuel containers on the upstream side of the crossing in impermeable, sided structures which will act as containment units (refer to Section 29.0). Pumps used for this crossing method will not be placed directly in the stream or on the streambed. Pumps will have a capacity greater than the anticipated stream flow. The pumping operation will be staffed 24 hours a day. Pumping will be adjusted as necessary to maintain an even flow of water across the work area and near-normal water levels upstream and downstream from the crossing.

- Suspend the pump intake to prevent sediment uptake from the bottom of stream and equip with a screen, or equivalent device, to prevent fish uptake.

- Where possible, excavating equipment will operate from one or both banks, without entering the stream. If equipment must encroach into the stream, it will operate on clean construction mats (free of soil and plant material prior to being transported onto the construction ROW). Segregate streambed material place within a spoil containment structure in approved construction work area limits. Storage of streambed spoil within the stream will only occur if expressly approved in the applicable permits.

- Leave earthen trench plugs (hard plugs) between the stream and the upland trench undisturbed during excavation of the in-stream trench to prevent diversion of the stream flow into the open trench and to prevent water from the adjacent upland trench from entering the waterbody. Remove trench plugs immediately prior to pipe placement, and then replace when the pipe is in place. Dewater trench water accumulated upslope of trench plugs prior to trench plug removal in accordance with Section 25.1.

- Manage standing water isolated in the construction area by the dams in accordance with Section 25.1.

- Backfill the in-stream trench so that the stream bottom is as near as practicable to its pre-construction condition, with no impediments to normal water flow. Backfill material will consist of the spoil material excavated from the trench and parent streambed unless otherwise specified in state or federal permits.

- Permanent stabilization will be initiated prior to restoring flow, which includes restoring the stream banks as near as practicable to pre-construction conditions unless that slope is determined to be unstable. If Enbridge determines that the slope is unstable, the banks will be reshaped to prevent slumping. Once the banks are reshaped, ECDs will be installed immediately after backfilling the crossing. Seed (refer to Section 21.7) and mulch and/or erosion control blankets will be installed within a 50-foot buffer on either side of the stream. Temporary slope breakers will also be installed on all sloped approaches to streams in accordance with Section 8.9.

- Upon completing bank stabilization, the dam will be removed to resume natural stream flow.

23.3.3 Flume Method

The flume method (refer to Figure 16) involves placement of flume pipe(s) in the stream bed to convey stream flow across the construction area without introducing sediment to the water using the following procedures:

- The flume(s) will be of sufficient diameter to transport the maximum flows anticipated to be generated from the watershed. The flume(s), typically 40 to 60 feet in length, will be installed before trenching and align so as not to impound water upstream of the flume(s) or cause downstream bank erosion.

- Incorporate the upstream and downstream ends of the flume(s) into dams made of sand bags and plastic sheeting (or equivalent). Construct the upstream dam first and will funnel stream flow into the flume(s). The downstream dam will prevent backwash of water into the trench and construction work area. Dams will be continuously monitored for a proper seal and adjustments made to prevent large volumes of water from seeping around the dams and into the trench and construction work area.

- Where possible, excavating equipment will operate from one or both banks, without entering the stream. If equipment must encroach into the stream, it will operate on clean construction mats. Segregate streambed material and place within a spoil containment structure in approved construction work area limits. Storage of streambed spoil within the stream will only occur if expressly approved in the applicable permits.

- Leave earthen trench plugs (hard plugs) between the stream and the upland trench undisturbed during excavation of the in-stream trench to prevent diversion of the stream flow into the open trench and to prevent water from the adjacent upland trench from entering the waterbody. Remove trench plugs immediately prior to pipe placement, and then replace when the pipe is in place. Dewater trench water accumulated upslope of trench plugs prior to trench plug removal in accordance with Section 25.1.

- If additional trench dewatering is necessary to complete the installation of the pipe, manage in accordance with Section 25.1.

- Backfill the in-stream trench so that the stream bottom is as near as practicable to its pre-construction condition, with no impediments to normal water flow. Backfill material will consist of the spoil material excavated from the trench and parent streambed unless otherwise specified in state or federal permits.

- Permanent stabilization will be initiated prior to restoring flow, which includes restoring the stream banks as near as practicable to pre-construction conditions unless that slope is determined to be unstable. If Enbridge determines that the slope is unstable, the banks will be reshaped to prevent slumping. Once the banks are reshaped, ECDs will be installed immediately after backfilling the crossing. Seed (refer to Section 21.7) and mulch and/or erosion control blankets will be installed within a 50-foot buffer on either side of the stream. Temporary slope breakers will also be installed on all sloped approaches to streams in accordance with Section 8.9.

- Upon completing bank stabilization, the dam will be removed to resume natural stream flow.

23.3.4 Directional Drill and/or Guided Bore Method

Installing the pipe underneath a stream will involve placing a drill unit on one side of the stream. A small-diameter pilot hole will be drilled under the stream along a prescribed profile. After the pilot hole has been completed, barrel reams will be used to enlarge the pilot hole to accommodate the desired pipeline diameter. Drilling mud will be necessary to remove cuttings and maintain the integrity of the hole. Water from an Enbridge-approved source will be used, in accordance with Section 26.0, to prepare the slurry of drilling mud. The pipe section is then pulled through the pilot hole using the drilling rig.

Drilling Mud

Drilling mud and slurry will be stored back from the waterbody in an earthen berm sediment control structure, in tanks, or by other methods so that it does not flow into the waterbody, adjacent wetlands or off the workspace.

After the pipe is in place, excess drilling mud will be hauled off to an Enbridge-approved disposal location or licensed disposal facility.

Temporary Stabilization

The directional drilling/guided bore method normally does not result in the disturbance of the stream banks or riparian vegetation (with exception of limited hand clearing required to facilitate guide wire placement, place pumps to appropriate water, etc.), which reduces the potential for erosion and sedimentation at the stream crossing. Consequently, temporary ECDs installed at open-cut crossings typically are not necessary for drilled/bored crossings.

23.3.5 Swales & Intermittent Streams/Agricultural Ditches

Swales will be restored as near as practicable to original conditions. Swales will be seeded and either mulched with straw or erosion control blankets will be installed to the perceivable top of bank for the width of the construction ROW.

The pipeline will typically be installed across intermittent streams and agricultural ditches using the wet trench method (refer to Section 23.3.1) or as otherwise specified in the applicable permits. If rain is forecasted within 24 hours prior to the crossing, a dry crossing technique may be implemented (as previously detailed and at the discretion of Enbridge). For small, dry intermittent streams and agricultural drainage ditches, standard upland construction procedures may be used, which involve grading, stringing, welding, excavating the trench with backhoes, installing the pipe in the trench, and backfilling the trench with native material. When the dry intermittent stream is small enough to string the pipe without grading the banks, the 20 foot grading buffers will still apply. Where grading of the dry intermittent stream banks is necessary to string the pipe, a flume will be installed if stream flow is anticipated before the crossing is complete. In both cases, stringing of the pipe will be off the bed of the stream to limit flow restriction should it occur.

23.3.6 Supplemental Bank Stabilization

Unstable soils and/or site-specific factors such as stream velocity and flow direction may require additional restoration efforts, such as installation of rock rip-rap, to stabilize disturbed stream banks. Rock rip-rap will only be used where site-specific conditions require and where Enbridge acquired applicable

permits or approvals. Geotextile fabric and rock riprap will be placed according to site and permit conditions (refer to Figure 17) and disturbed soils will be prepared upslope and on either side for seeding.

24.0 WETLAND CROSSING GENERAL REQUIREMENTS

The intent of these procedures is to minimize construction-related disturbance and sedimentation of wetlands and to restore as nearly as possible to pre-existing conditions. Additionally, in wetlands actively farmed at the time of construction, Enbridge will construct the pipeline using standard upland methods. Pipe stringing and fabrication may occur within the farmed wetland adjacent to the trench, or adjacent to the farmed wetland in a designated ATWS.

Refer to the following Sections for additional details regarding construction requirements in wetland areas:

- Clearing and Grading, Section 7.0
- Erosion and Sediment Control, Section 8.0
- Topsoil Segregation, Section 9.0
- Backfilling, Section 14.0
- Restoration and Revegetation, Section 21.0

24.1 RIGHT-OF-WAY STABILIZATION

Typically, low ground pressure equipment will be used, limiting disturbance to the wetland. Tree stumps, brush riprap, imported soil, and rock fill will not be brought in to stabilize the ROW in wetlands. Where low ground pressure equipment is not used, construction equipment will operate from timber construction mats or equivalent means with prior approval from Enbridge (refer to Figure 18). To prevent the spread of noxious and invasive plant species, timber mats will be free of loose soil and plant material prior to being transported onto the construction ROW and/or moved from one area of the construction ROW to another area. Timber riprap (also known as corduroy road) will not be used without prior written approval from Enbridge and the appropriate regulatory agencies. Pre-existing corduroy roads in wetlands may be used, but may not be improved, maintained, restored, or replaced without site-specific authorization from applicable agencies.

Subsoil from the pipeline trench will be sidecast within the wetland construction workspace. Subsoil may be placed on top of equipment mats for additional stabilization over the ditch line or on the working side to facilitate trench excavation. All timber mats, construction debris, and larger woody vegetative debris will be removed during cleanup of wetlands.

24.2 PIPELINE INSTALLATION

The following procedures minimize siltation and disturbance to wetlands during installation.

24.2.1 Push/Pull Method

Large wetlands with standing water may not be feasible to cross with typical crossing methods. In these areas, the pipeline will be assembled in an upland area and positioned in the trench using the push-pull and/or float techniques.

Usually this fabrication requires use of ATWS adjacent to the construction ROW. A backhoe (or equivalent) supported on timber mats, swamp hoe, or equivalent low ground pressure equipment will be

used to dig the trench. The prefabricated section of pipeline is then push-pulled into position or floated across the wetland. When the pipeline is in position, the floats (if used) are removed and the pipeline will sink into position. The trench will then be backfilled and a backhoe, similar equipment working from construction mats, or low ground pressure equipment will be used to restore the wetland.

25.0 CONSTRUCTION DEWATERING

25.1 TRENCH DEWATERING

Prior to initiating dewatering activities, the EI will approve the water discharge plan to ensure that the best management practices are applied in such a way as to minimize the potential for scour and water containing sediment from reaching a wetland or waterbody. Furthermore, Enbridge requires landowner approval in advance of placement of dewatering structures outside of the approved construction ROW. Each water discharge situation will be assessed to include:

- **Water Discharge Setting** - This includes:
    - Soil Type - The soil type the discharged water would flow over. The management of discharged water traveling over sandy soil is more likely to soak into the ground as compared to clay soils.
    - Ground Surface - The topography in the area that would influence the surface flow of the discharged water.
    - Adjustable Discharge rate – Managing the flow rate of the discharged water (which may need to vary) based on the site conditions to minimize instances of water from reaching a sensitive resource area such as a wetland or waterbody. (Example - Water discharged at 500 gallons per minute may soak into the ground while if discharged at a higher flow rate would cause water to flow via overland runoff into a sensitive resource area)
    - Discharge Outfall - The amount of hose and number/size of pumps necessary to attempt to discharge water at a location which drains away from waterbodies or wetlands.

- **Pump Intake** - Use floating suction hose or other similar measures to prevent sediment uptake from bottom of trench.

- **Overwhelming Existing Drainage** - If the discharge (assumed to be clean) enters a stream, the additional flow will not exceed 50 percent of the peak storm event (to prevent adding high water volumes to a small stream channel that causes erosion due to imposing high flow conditions).

- **Filtering Mechanism –** Direct all dewatering discharges through a filtering device as indicated below.
    - Well-Vegetated Upland Area – Direct water to a well-vegetated upland area through a geotextile filter bag sized appropriately for the discharge flow and suspended sediment particle size (refer to Figure 19).
    - Straw Bale Dewatering Structure – Where the dewatering discharge point is not in an upland area due to site conditions and/or distance, direct the discharge into a straw bale dewatering structure in conjunction with a geotextile filter bag, if necessary based on site conditions. The size of the straw bale dewatering structure is dependent on the maximum water discharge rate (refer to Figure 20).

- Alternative dewatering methods – Enbridge may approve alternative methods on a site-specific basis and in accordance with applicable permit conditions.

25.1.1 Flow Measurement and Water Sampling

The volume of water discharged from the trench will be recorded, if specified in the applicable permits. The volume may be determined using a flow meter, or equivalent method, as approved by Enbridge or specified by applicable permit conditions.

Enbridge will collect and analyze samples of the discharge water if specified by applicable permit conditions.

25.1.2 Regulatory Notification and Reporting

Enbridge will notify and submit reports to agencies if specified by applicable permit conditions.

25.2 HYDROSTATIC TEST DISCHARGES

Hydrostatic testing involves filling the new pipeline segments with water acquired in accordance with applicable permits (refer to Section 26.0), raising the internal pressure level, and holding that pressure for a specific period of time per federal DOT specifications. Enbridge may hydrostatically test pre-built sections prior to installation using horizontal directional drilling (HDD) and/or guided bore techniques. Hydrostatic testing will occur in accordance with applicable appropriation and discharge permits.

25.2.1 Refueling

The operation and refueling of hydrostatic test equipment will be in accordance with the conditions outlined in Section 29.0.

25.2.2 Siting of Test Manifolds

Hydrostatic test manifolds will be installed where necessary to ensure proper test pressures and incorporates changes due to topography. Where feasible, Enbridge will incorporate minor adjustments to the test manifold locations to avoid placement in wetlands and riparian areas. However, completely avoiding the placement of a test manifold in a wetland may not always be possible. The appropriate ECDs will be installed where the EI determines they are necessary.

25.2.3 Water Sampling

Enbridge will collect and analyze samples of discharge water from hydrostatic tests as specified in applicable permits.

25.2.4 Best Management Practices

Prior to hydrostatic testing the pipeline, the pipe will be prepared using a cleaning pig. Any debris from the pigging operation will be collected and disposed of at an Enbridge approved location or in accordance with the Project-specific permits. Upon completion of the cleaning operation, the pipe will be filled with water and the hydrotest will be started.

Following testing, the test is depressurized and the water is discharged according to applicable permit conditions. Upland discharges will occur within a well-vegetated area with an appropriate dewatering

structure such as a geotextile filter bag and/or a hay bale structure lined with geotextile fabric. Direct discharges to surface waters, will occur in accordance with applicable permits.

Discharge rates will be in accordance with the applicable permit conditions. In the event the applicable permits do not identify a maximum discharge rate, EIs will monitor and adjust as necessary to avoid scouring, erosion, or sediment transport from the discharge location. The total volume of water discharged will be determined using a flow meter (or equivalent with Enbridge approval).

To minimize the potential for introduction and/or spread of invasive species due to new mainline hydrostatic testing activities, Enbridge will discharge the hydrotest water to the same source location unless specified otherwise in applicable permits. If water is used to test multiple test sections, it will be relayed back to the source water through the pipeline for final discharge (unless specified otherwise in applicable permits).

26.0 WATER APPROPRIATION

26.1 GENERAL

Water may be drawn from local sources, such as lakes, streams, and private or municipal wells for construction activities such as dust control, horizontal directional drilling/guided boring, trench dewatering, and hydrostatic testing.

The intake hose will be suspended off of the stream or lake bottom and equipped with a screen, or equivalent device, to prevent fish uptake. During appropriation, the adequate waterbody flow rates and volumes will be maintained to protect aquatic life and allow for downstream uses. The volume and rate of appropriation will be monitored to comply with applicable permit conditions.

26.2 WATER SOURCES

Water will only be appropriated from Enbridge-approved sources and in accordance with applicable permits. No additives will be used, without written approval from Enbridge and in accordance with applicable permits.

26.3 FLOW MEASUREMENT

The appropriation rate and total volumes will be measured with a flow meter (or equivalent) and the data provided to Enbridge, as required by the applicable permits.

26.4 WATER SAMPLING

Where required by permit conditions, Enbridge will sample the water during appropriation. The Contractor will assist Enbridge in obtaining these samples.

26.5 REGULATORY NOTIFICATION AND REPORTING

Enbridge will notify appropriate agencies of the time of appropriations if required by applicable permit conditions. Enbridge will submit reports regarding the volume and quality of the water withdrawn if required by the applicable permits.

27.0 WINTER CONSTRUCTION

Grading of the right-of way can continue through the winter months in accordance with Section 7.0. Any snow within the ROW will be plowed by pushing off to the side prior to grading activities. If soils are

frozen down to the topsoil/subsoil level and grading of the ROW results in mixing of these layers, alternative procedures such as ripping to the topsoil subsoil layer prior to grading activities will be implemented to avoid mixing.

The area of open excavation will be minimized during winter construction. Backfill of the trench will continue through the winter months in accordance with Section 14.0. However, if weather conditions result in frozen backfill placement into the trench, topsoil restoration will be delayed until soils thaw to allow for any subsidence of the trench to be mitigated with grading of subsoils. Once grading of subsoil occurs, full topsoil restoration can occur.

Topsoil restoration may continue through the winter months in accordance with Section 15.0. If snow is on the ROW it will be removed by pushing off the construction area prior to topsoil restoration. If weather conditions preclude effective soil decompaction treatment, topsoil restoration may continue utilizing one of the two following options:

- Perform soil decompaction through the topsoil to a deeper depth when soils become dry enough for effective soil compaction treatment. If decompaction cannot occur through the topsoil to the required subsoil depth, the topsoil will be stripped prior to decompaction when conditions are conducive.

- Enbridge may elect to forego decompaction if the landowner agrees to either complete the work himself or hires a third party to complete the work at a later date.

Seeding may continue through the winter months in accordance with Section 21.0. This includes the requirements for dormant seeding (including mulching) with the addition of cool season grasses to improve the likelihood of successful revegetation. Drill seeding will be the primary method unless soil conditions preclude this method. Upon topsoil restoration, seeding must occur within 48 hours or earlier to avoid seeding on frozen ground.

If winter conditions preclude cleanup and topsoil restoration, the area will be stabilized and temporary ECDs will remain in place until installation of permanent erosion control measures is complete. Depending on site and weather conditions, Enbridge may require the use of dormant seeding, mulching, and/or installation of erosion control blanket on stream banks or other sensitive locations in accordance with Section 8.0.

28.0 WASTE MANAGEMENT

The Contractors will handle, store, and dispose of all solid and hazardous materials and wastes they generate as a result of the Project. The Contractor will determine if the materials and wastes associated with the Project classify as hazardous materials and/or wastes in accordance with applicable federal and/or state criteria. The Contractor will provide documentation to Enbridge to substantiate findings of the regulatory status of wastes or generated as a result of the Project.

The Contractor will collect all waste materials, including oil or other waste liquids generated as a result of equipment maintenance, daily in suitable or approved containers (i.e., labeled and meeting any relevant regulatory requirements). On a routine basis, the Contractor will remove the containers of waste from the site and properly dispose of them. Throughout the duration of the Project, the Contractor will clean up areas to the satisfaction of Enbridge. The Contractor is responsible for proper off-site disposal of all

wastes generated during the Project. No wastes are to be left on Enbridge property, along the ROW, or buried in an excavation or otherwise disposed of on Enbridge property or ROW.

28.1 HAZARDOUS WASTES

If a Contractor generates a hazardous waste from materials they have brought on-site (e.g., paint clean-up solvents, waste paints, etc.), they are responsible for proper waste collection, storage, and disposal in accordance with all applicable regulations.

28.2 ABRASIVE BLAST DEBRIS

The Contractor will contain and collect spent abrasive blast materials and place into appropriate containers. The Contractor is responsible for covering the containers with appropriate means of rainwater and stormwater control to prevent said waters from entering or exiting the container. The Contractor is responsible for disposal of the spent abrasive in accordance with applicable federal, state and local regulatory requirements. The Contractor is responsible for determining if the spent abrasive is classified as a hazardous or special waste, as defined by applicable federal and state regulations. If the spent abrasive is a hazardous waste as a direct result of constituents of an Enbridge facility or equipment, Enbridge will coordinate proper disposal with the Contractor as previously discussed.

29.0 SPILL PREVENTION, CONTAINMENT, AND CONTROL MEASURES

This section describes planning, prevention and control measures to minimize impacts resulting from spills of fuels, petroleum products, or other regulated substances as a result of construction. The Contractor will implement these measures, unless Enbridge indicates otherwise.

29.1 PLANNING AND PREVENTION

Enbridge requires its Contractors to implement proper planning and preventative measures to minimize the likelihood of spills, and to quickly and successfully clean up a spill should one occur. This section sets forth minimum standards for handling and storing regulated substances and cleaning up spills. Potential sources of construction-related spills include machinery and equipment failure, fuel handling, transfer accidents and storage tank leaks. The Contractor will be responsible for implementing, at a minimum, the following planning and prevention measures.

29.2 ROLES AND RESPONSIBILITIES

29.2.1 Spill Coordinator

The Contractor will designate a Spill Coordinator, subject to Enbridge approval. For all construction related spills, the Spill Coordinator will:

- report all spills to the Enbridge Representative immediately;
- report spills to appropriate federal, state and local agencies as soon as possible (subject to EI verification);
- mobilize on-site personnel, equipment, and materials for containment and/or cleanup commensurate with the extent of the spill;

- assist the Emergency Response Contractor (refer to a list of potential contractors provided in Appendix C) and monitor containment procedures to ensure that the actions are consistent with the requirements of this section;

- in consultation with Enbridge and appropriate agencies, determine when it is necessary to evacuate spill sites to safeguard human health;

- in consultation with Enbridge, coordinate with appropriate agencies the need to contact additional parties or agencies; and

- complete a Spill Report Form (refer to Appendix D) within 24-hours of the occurrence of a spill, regardless of the size of the spill.

29.2.2 Environmental Inspector

The EI will monitor the Contractor's compliance with the provisions of this section to ensure that the Contractor makes the appropriate agency notifications, allocates spill resources, and accomplishes clean-up in accordance with applicable agency requirements

29.3 TRAINING

The Contractor will train all employees handling fuels and other regulated substances to follow spill prevention procedures. The Contractor will train all employees who handle fuels and other regulated substances to prevent spills and to quickly and effectively contain and clean up spills that may occur in accordance with applicable regulations.

29.4 EQUIPMENT

- Each construction crew will have adequate absorbent materials on hand to enable the rapid cleanup of any spill which may occur.

- The Contractor will maintain spill kits containing a sufficient quantity of absorbent and barrier materials to adequately contain and recover foreseeable spills. These kits may include, but are not limited to absorbent pads, straw bales, absorbent clay, sawdust, floor-drying agents, spill containment barriers, plastic sheeting, skimmer pumps, and holding tanks. The Contractor will locate this equipment near fuel storage areas and other locations as necessary to be readily available to control foreseeable spills.

- Suitable plastic lining materials will be available for placement below and on top of temporarily-stored contaminated soils and materials.

- All fueling vehicles, and where necessary, service vehicles, will carry materials adequate to control foreseeable spills. Such material may include but not be limited to absorbent pads, commercial absorbent material, plastic bags with ties, and shovels.

- The Spill Coordinator will inform all Contractor personnel and the EIs of the locations of spill control equipment and materials, and have them readily accessible during construction activity.

- All fuel nozzles will include functional automatic shut-offs.

- Fuel trucks transporting fuel to on-site construction equipment will travel only on approved access roads.

29.5 SUPERVISION AND INSPECTION

The Contractor will perform a pre-construction inspection and test of all equipment to ensure that it is in good repair. During construction, the Contractor will regularly inspect hoses, pipes, valves, and tanks to ensure equipment is free of leaks. The Contractor will remove from service any equipment found to be is leaking or in need of repair and repair prior to resuming work.

29.6 STORAGE AND HANDLING OF FUELS/HAZARDOUS LIQUIDS

29.6.1 Fuel Storage - General

The Contractor will follow proper fuel storage practices, including, but not limited to the following:

- Fuel storage will be at Contractor yards only (unless Enbridge approves otherwise in advance).
- Install signage at and adjacent to fuel storage areas to include "Fuel Storage Area – No smoking within 50 feet."
- Keep tools and materials to stop the flow of leaking on-site. Such equipment may include, but not be limited to, plugs of various sizes, 3M tank patches, a hammer, assorted sizes of metal screws with rubber washers, a screwdriver, and plastic tape.
- Store fuels, lubricants, waste oil, and any other regulated substances in aboveground tanks only.
- Storage tanks and containers will conform to all applicable industry codes (e.g., NFPA, UFC).
- Utilize a secondary containment structure at each fuel storage site providing a minimum containment volume equal to 150 percent of the volume of the largest storage vessel.
- Secondary containment areas will not have drains. If visual inspection indicates that no spillage has occurred in the secondary containment structure, the Contractor may discharge accumulated water in accordance with Section 25.0. If spillage occurred in the structure, the Contractor will collect and dispose and/or recycle at a licensed facility.

29.6.2 Refueling

Contractor will make all efforts to dispense fuel during daylight hours. Construction personnel will monitor fuel dispensing operations at all times. Personnel monitor at both ends of the hose during fueling unless both ends are visible and are readily accessible by one person.

29.6.3 Refueling, Maintenance, and Fuel Storage near Wetlands and Waterbodies

Enbridge requires that the storage of petroleum products, refueling, maintenance, and lubricating operations take place in upland areas that are more than 100 feet from wetlands, streams, and waterbodies (including drainage ditches), and water supply wells. In addition, the Contractor will store hazardous materials, chemicals, fuel and lubricating oils, and perform concrete coating activities outside these areas.

In certain instances, refueling or fuel storage may be unavoidable due to site-specific conditions or unique construction requirements (e.g., continuously operating pumps or equipment on barges). An EI must approve these locations in advance.

Site-specific precautions, in addition to those practices described above, will be implemented when refueling or maintenance activities are required within 100 feet of streams, wetlands or other waterbodies. These precautions include, but are not limited to:

- Keeping adequate amounts of absorbent materials and containment booms on hand to enable the rapid cleanup of any spill which may occur;
- Using secondary containment for fuel storage and refueling of continuously operating pumps ;
- Secondary containment structures will provide a containment volume of at least 150 percent of the storage vessel, and allow for at least one foot of freeboard; and
- Providing adequate lighting for these locations and activities.

29.6.4 Overnight parking

Enbridge does not allow overnight parking of equipment (including but not limited to light plants, generators, pumps, and machinery) within 100 feet of a wetland or waterbody unless the Contractor implements special containment and with advance approval from an EI.

29.7 INITIAL SPILL MANAGEMENT

29.7.1 Immediate Response

Immediately upon learning of any fuel, oil, hazardous material or other regulated substance spill, or upon learning of conditions that will lead to an imminent spill, the person discovering the situation will:

- Initiate actions to contain the fluid that has spilled or is about to spill, and initiate action to eliminate the source of the spill to the maximum extent that is safely possible.
- Notify the crew foreman and/or the Spill Coordinator and provide them with the following information:
    - Location and cause of the spill;
    - The type of material spilled; and
    - Whether the spill has reached or is likely to reach any surface water.

Upon learning of a spill or a potential spill the Spill Coordinator will:

- Assess the situation and determine the need for further action;
- Direct subsequent activities and/or further assign responsibilities to other personnel; and
- Notify the EI.

29.7.2 Mobilization

The Spill Coordinator will mobilize on-site personnel, equipment, and materials for containment and/or cleanup commensurate with the extent of the spill. If the Spill Coordinator feels that a spill is beyond the scope of on-site equipment and personnel, the Spill Coordinator will immediately notify the Construction Superintendent that an Emergency Response Contractor is necessary to contain and/or clean up the spill. Appendix C contains a list of potential Emergency Response Contractors. The Spill Coordinator will assist the Emergency Response Contractor and monitor containment procedures to ensure that the actions are consistent with the requirements of this Section.

In the event of a suspected Enbridge pipeline spill (or from an adjacent pipeline), Enbridge's Emergency Pipeline Control Center will be notified at 1-800-858-5253 (24-hours/day), as well as the Enbridge EI. Actions requiring emergency response will be coordinated by Enbridge.

29.8 SPILL NOTIFICATION RESPONSIBILITIES

29.8.1 Notification Volumes

The Contractor's Construction Superintendent or representative will notify the Enbridge Representative and the EI immediately of any spill of a petroleum product or hazardous liquid, regardless of volume.

29.8.2 Spill Report Form

The Spill Coordinator will complete a Spill Report Form (Appendix D) for each release of a regulated substance, regardless of volume and submit to the EI within 24 hours of the occurrence of a spill. Enbridge may also require the Contractor to provide follow-up written reports, associated laboratory analyses, and other documentation separately on a site-specific basis as directed by the EI.

29.8.3 Agency Notification

The Contractor will report spills to appropriate federal, state and local agencies as soon as possible. Appendix E includes a listing of federal, state, and local agencies including reporting thresholds and timeframes.

29.9 SPILL CONTAINMENT AND CLEANUP

In the event of a spill, the Contractor will abide by all applicable federal, state and local regulations. Specific cleanup measures for both upland and wetland/waterbody spills are described below.

29.9.1 Spill Control - Upland Areas

- If a spill should occur during refueling operations, **STOP** the operation.
- The Contractor will identify and contain the source of the spill immediately.
- For large spills on land, contain and pump immediately into tank trucks.
- The Contractor will place absorbent material(s) placed over spills to minimize spreading and to reduce its penetration into the soil.

- The Spill Coordinator, in consultation with the EI and appropriate agencies, determine when spill sites require evacuation to safeguard human health. Evacuation parameters will include consideration for the potential of fire, explosion, and hazardous gases.

- The Contractor will treat and/or dispose of the spilled material, spent absorbent materials, and contaminated soil in accordance with all applicable federal, state, and local agency requirements.

29.10 SPILL CONTROL - WETLANDS AND WATERBODIES

In addition to the above measures, the following conditions apply if a spill occurs near or into a wetland or waterbody, regardless of size:

- If a spill occurs during refueling operations, **STOP** the operation.

- The Contractor will use absorbent booms and pads to contain and recover released materials in standing water.

- If necessary, for large spills in waterbodies, The Contractor will secure an Emergency Response Contractor to further contain and clean up the spill.

- The Contractor will excavate contaminated soils in wetlands and temporarily place them on plastic sheeting in a bermed area, a minimum of 100 feet away from the wetland. The Contractor will cover contaminated soils with plastic sheeting while storing temporarily and dispose of as soon as possible, in accordance with Section 29.11.

29.11 STORAGE AND DISPOSAL OF CONTAMINATED MATERIALS

- Appendix C lists potential treatment and disposal facilities for contaminated materials, petroleum products, and other construction-related wastes. The Contractor should recycle those wastes, such as motor oil, where there is an established recycling program available.

- The Contractor will store and dispose of all contaminated soils, absorbent materials, and other wastes in accordance with all applicable state and federal regulations.

- The Contractor will only use licensed carriers to transport contaminated material from the site to a disposal facility.

The Contractor will cover contaminated soils with plastic sheeting while being stored storing temporarily and properly dispose of as soon as possible, in accordance with Section 28.0.

30.0 DRILLING FLUID RESPONSE, CONTAINMENT, AND NOTIFICATION PROCEDURES

Construction of a pipeline may include the use of trenchless methods known as the HDD and guided/road bore methods. Throughout this section, both methods are referred to collectively as “drilling”. While the HDD method always includes the use of drilling fluid, the guided or road bore method might use drilling fluid or only use water to power and lubricate the bore. The HDD drilling fluids/mud consists primarily of water mixed with inert bentonite clay. Under certain conditions and with Enbridge approval, an additive

may need to be mixed with the drilling fluids/mud for viscosity or lubricating reasons. Only non-hazardous additives will be used and Safety Data Sheets will be maintained on-site.

This section elaborates on measures to be implemented if an inadvertent release of drilling fluid occurs despite prevention efforts. Prior to the commencement of drilling operations, the Contractor will inform construction personnel involved who will be the responsible party(ies) for release containment and response. The Contractor will ensure that the appropriate response personnel and containment equipment are on site for each drill/bore.

30.1 ON-SITE OBSERVATION DURING CONSTRUCTION

During construction of a drilled crossing, Contractor personnel will monitor the pipeline route throughout the process, as follows:

- The Contractor will inform construction observers on what to watch for and will make them aware of the importance of timely detection and response actions to any release of drilling fluid.
- Construction observers will have appropriate, operational communication equipment (e.g., radio and cell phones) available at all times during installation of the directionally drilled crossing, with the ability to communicate directly with the HDD operator.
- During the pilot hole drilling and reaming phases, monitoring for loss of drilling fluid consists of closely scrutinizing the amount of fluid returns coming to the drill pit or shaker tank and monitoring the amount of makeup drilling fluid required in the mixing tanks. If the HDD operator identifies a sustained loss in fluid pressure or loss of circulation:
    - The operator will immediately notify the construction observers of the assumed position of the drill tool
    - The Contractor will visually monitor the appropriate portion of the drill path at the drill tool location to determine if an inadvertent return occurred. The Contractor may perform this monitoring by walking or by using a boat, as appropriate.
- Construction observers, EI(s), or the Enbridge HDD craft inspector have the authority to order installation of containment structures, if necessary, and to require additional response measures if deemed appropriate.

30.2 CONTAINMENT, RESPONSE, AND CLEAN-UP EQUIPMENT

Enbridge requires the Contractor to prepare and implement a contingency plan for inadvertent returns and provide the following equipment:

- Weed-free straw bales, or absorbent pads
- Sandbags
- Geotextile booms
- Trash pumps
- Storage tanks or barrels
- Light towers
- Silt fence
- Post pounders
- Shovels
- Squeegees
- Ice augers
- Snowmobile/ATV
- Boat
- Chainsaw
- Vacuum trucks
- Backhoes
- Geotextile or plastic sheeting

30.3 RESPONSE

The Contractor's contingency plan for inadvertent fluid returns will include the following:

- Procedure for notification of site, office, and Enbridge personnel
- Monitoring procedure for loss of circulation indicators
- Procedures for monitoring fluid pressure and ranges for acceptable annular pressure
- Decision points and procedures for suspending drilling operations
- Detailed descriptions of all monitoring (e.g., the annular pressure tool)
- An inventory of equipment and materials to be on-site for containment
- Containment methods in upland and wetland/waterbody locations

In the event an inadvertent drilling fluid release is observed, the EI and the Contractor will assess to determine the amount of fluid being released and potential for the release to reach sensitive resource areas (e.g., wetlands and waterbodies). Response measures will vary based on location of inadvertent release.

30.4 CLEAN-UP

The following measures will be implemented in the event of an inadvertent return:

- Cleaning up drilling fluid by hand using hand shovels, buckets and soft-bristled brooms without causing extensive ancillary damage to existing vegetation. Employing clean water washes Enbridge deems beneficial and feasible.
- Pumping out containment structures and scraping the ground surface to bare topsoil without causing undue loss of topsoil or ancillary damage to existing and adjacent vegetation.
- Collecting material in containers for temporary storage prior to removal from the site.

- The EI, in consultation with Enbridge and/or the applicable agencies, will regularly evaluate the potential for secondary impact from the clean-up process and clean-up activities terminated if physical damage to the site exceeds the benefits of removal activities.

30.5 RESTORATION AND POST-CONSTRUCTION MONITORING

Following cleanup activities, restoration and revegetation of affected areas will be completed in accordance with this EPP and all applicable permits. Enbridge will monitor the release site as appropriate to assure adequate restoration.

Figures

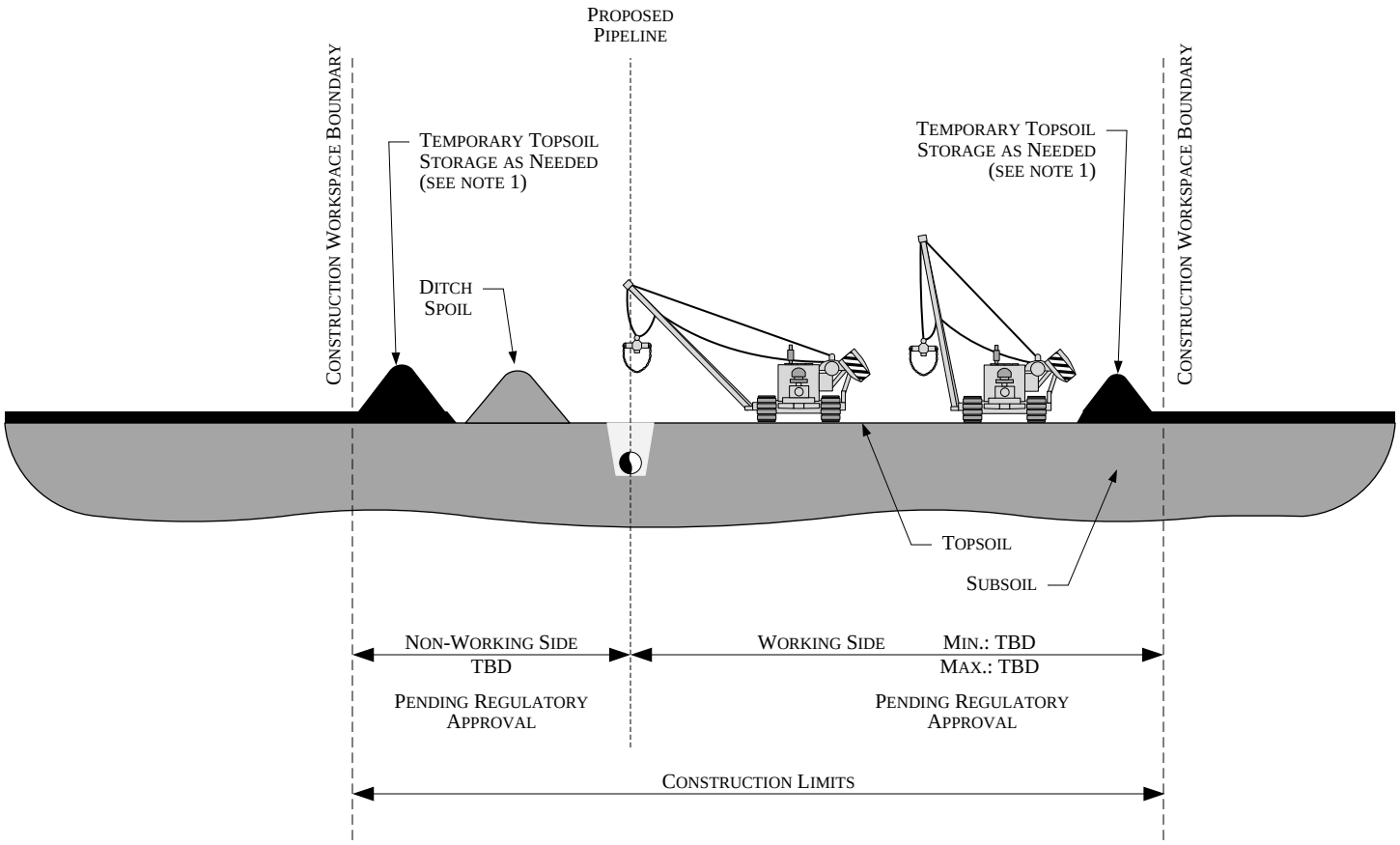

PROFILE

NOTES:

1. STOCKPILE TOPSOIL SEPARATELY FROM DITCH SPOIL AS SHOWN OR IN OTHER CONFIGURATIONS APPROVED BY THE COMPANY
2. TWO FEET (2') MINIMUM SEPARATION OR BARRIER BETWEEN TOPSOIL AND SUBSOIL

ENBRIDGE

Figure 1

Environmental Protection Plan

Typical Topsoil Segregation – Full Right-of-Way

Scale: NTS
Date: 10/11/2016
Revised: 12/17/2019
Location: M:\Department Tasks\EPP Figures wBorders\

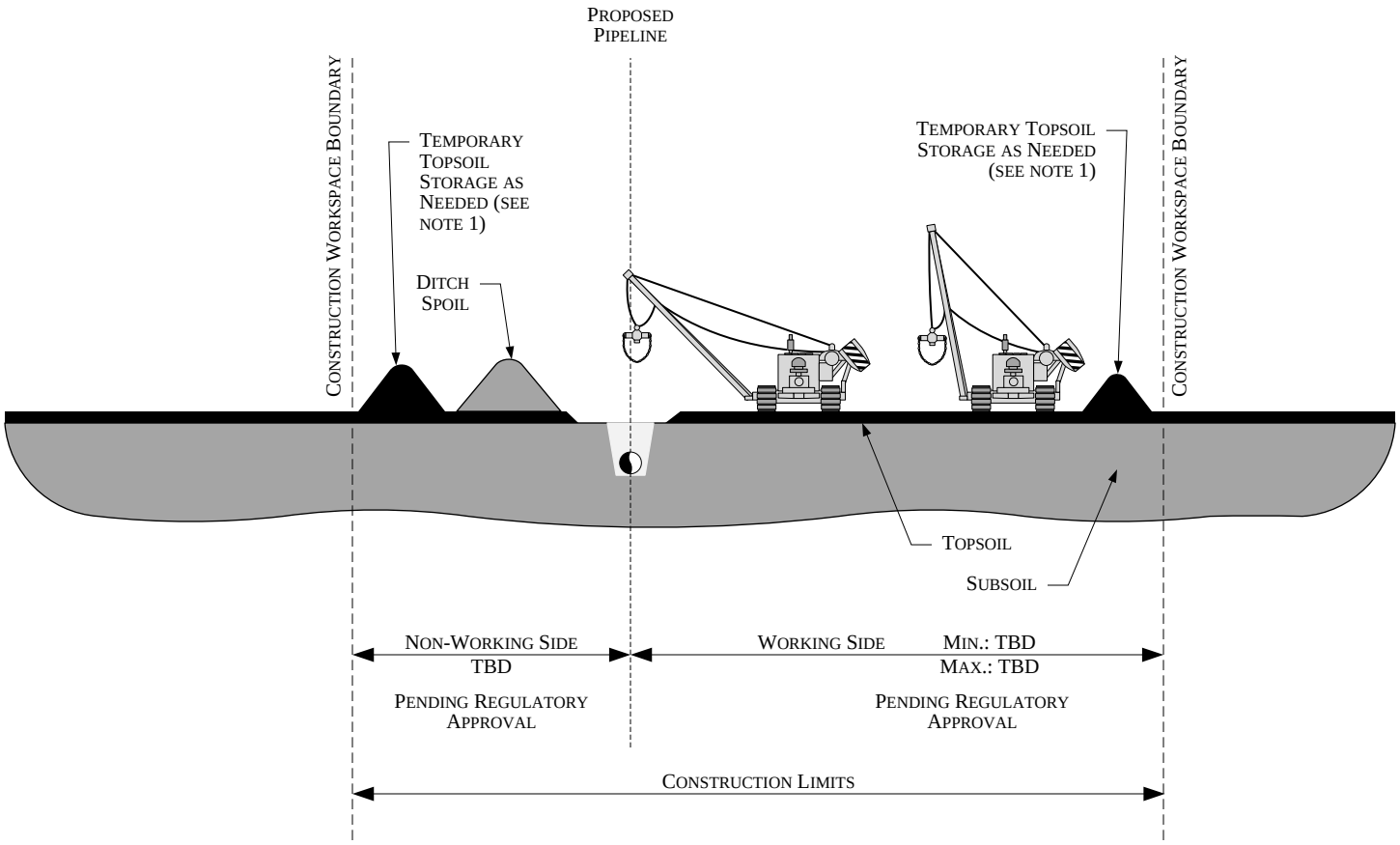

PROFILE

NOTES:

1. STOCKPILE TOPSOIL SEPARATELY FROM DITCH SPOIL AS SHOWN OR IN OTHER CONFIGURATIONS APPROVED BY THE COMPANY
2. TWO FEET (2') MINIMUM SEPARATION OR BARRIER BETWEEN TOPSOIL AND SUBSOIL

ENBRIDGE

Figure 2

Environmental Protection Plan

Typical Topsoil Segregation – Trench Line Only

Scale: NTS
Date: 10/11/2016
Revised: 12/17/2019
Location: M:\Department Tasks\EPP Figures wBorders\

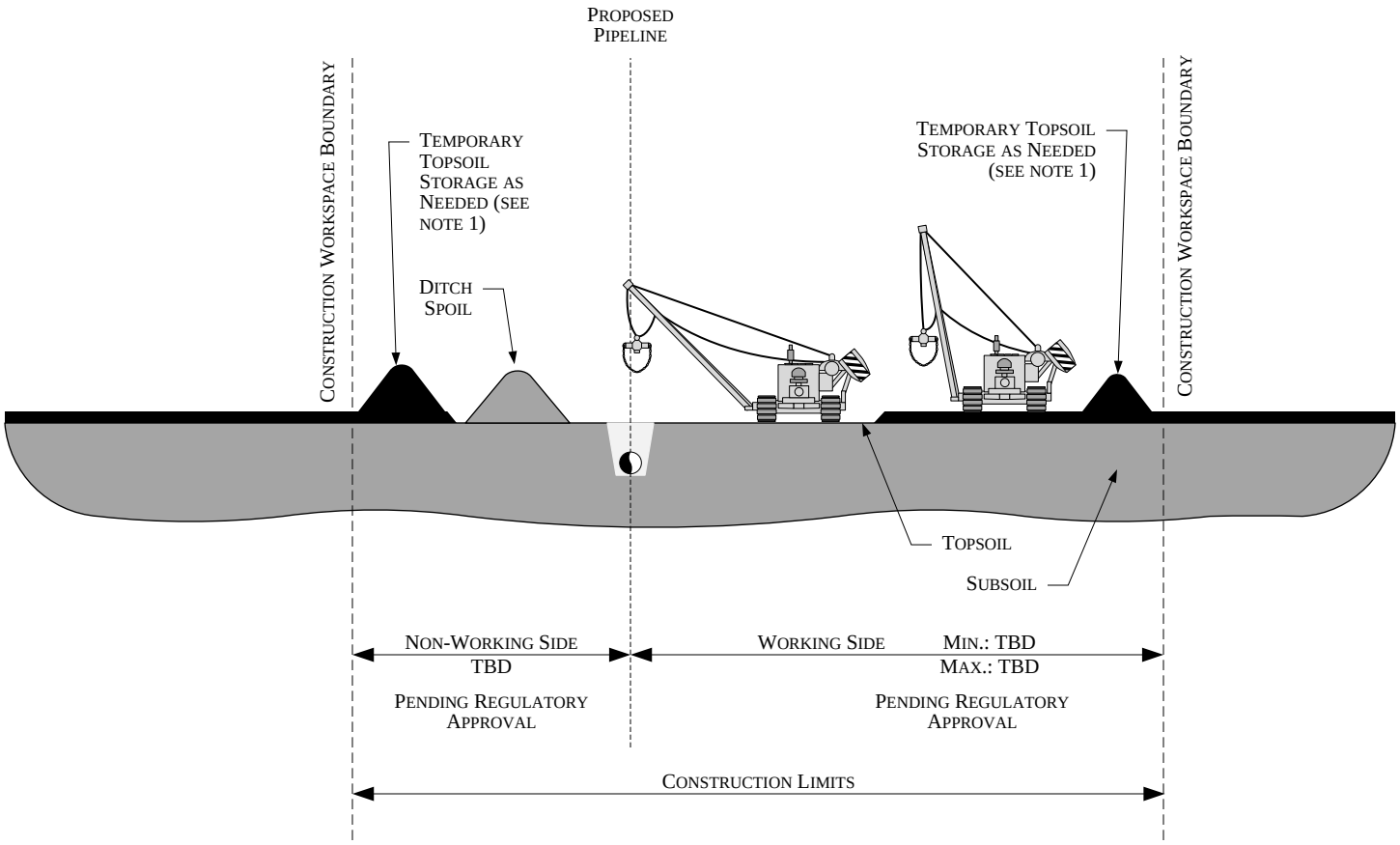

PROFILE

NOTES:

1. STOCKPILE TOPSOIL SEPARATELY FROM DITCH SPOIL AS SHOWN OR IN OTHER CONFIGURATIONS APPROVED BY THE COMPANY
2. TWO FEET (2') MINIMUM SEPARATION OR BARRIER BETWEEN TOPSOIL AND SUBSOIL

ENBRIDGE

Figure 3

Environmental Protection Plan

Typical Topsoil Segregation – Modified Ditch Plus Spoil Side

Scale: NTS
Date: 10/11/2016
Revised: 12/17/2019
Location: M:\Department Tasks\EPP Figures wBorders\

Silt Fence Plan (NTS)

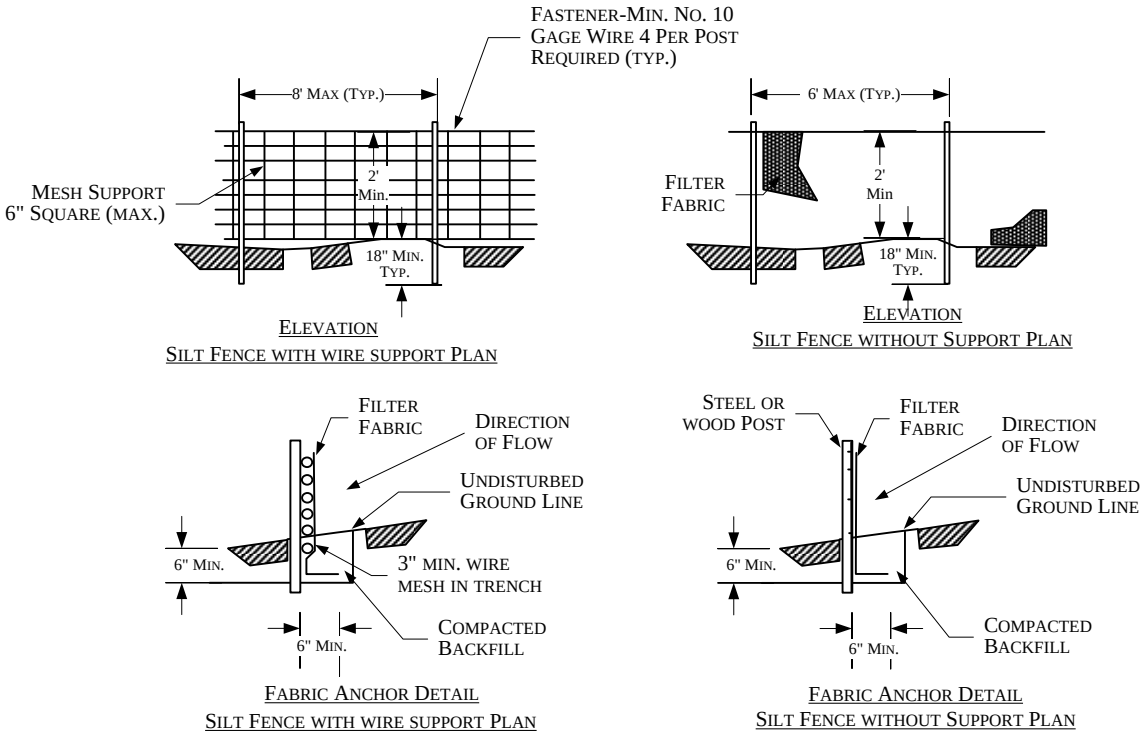

Notes:

1. Wires of mesh support shall be min. gage no. 12.
2. Filter fabric shall meet the requirements of the specification with equivalent opening size of at least 30 for nonwoven and 50 for woven. (Sieve No.)
3. The posts used to support the silt fence should be hardwood material with a minimum cross sectional area of 4 inches square and 4 feet long. Metal posts should be used in areas that pond water.

Attaching Two Silt Fences

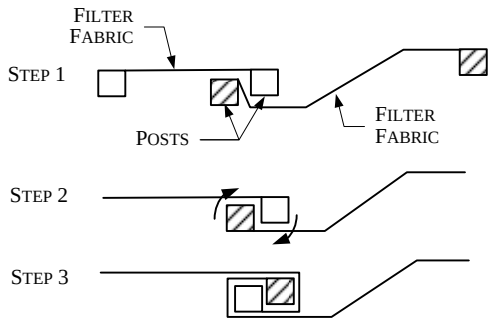

Notes:

1. Place the end post of the second fence inside the end post of the first fence.
2. Rotate both posts at least 180 degrees in a clockwise direction to create a tight seal with the fabric material.
3. Drive both posts a minimum of 18 inches in the ground and bury the flap.

ENBRIDGE

Figure 4

Environmental Protection Plan

Typical Silt Fence Installation

Scale: NTS
Date: 5/25/2001
Revised: 3/21/2017
Location: M:\Department Tasks\EPP Figures wBorders\

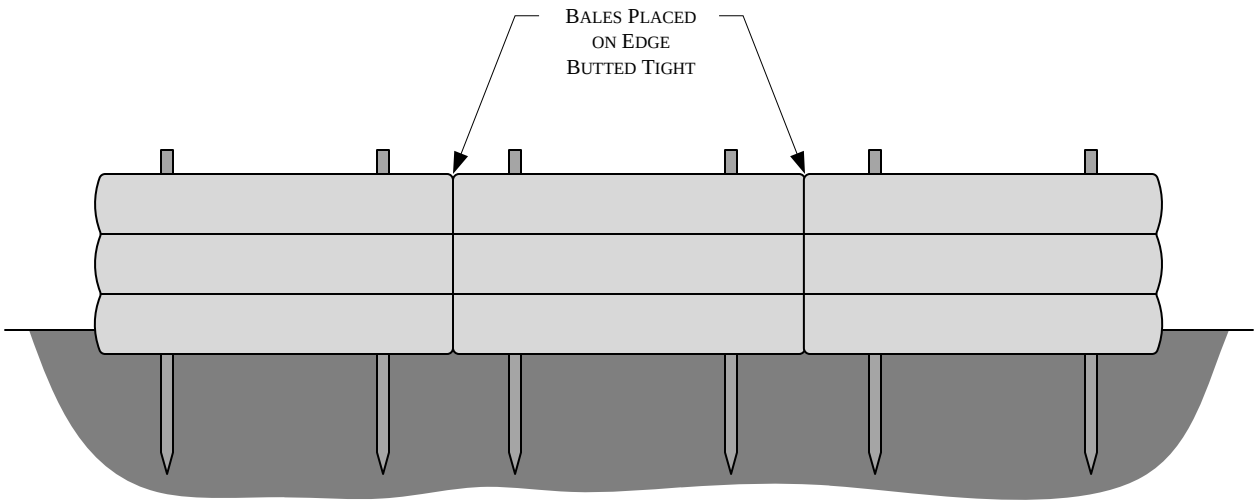

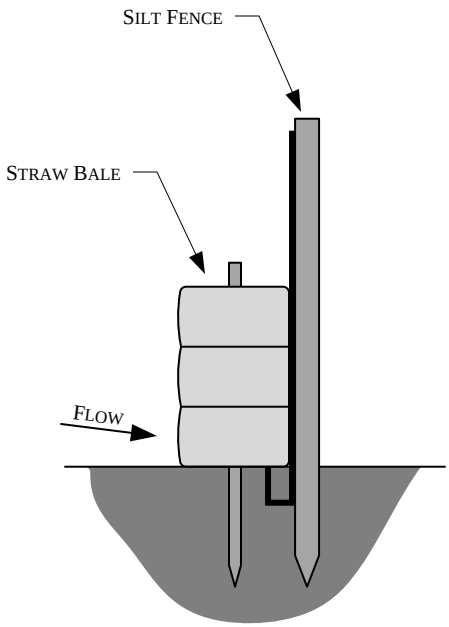

STRAW BALES AND SILT FENCE

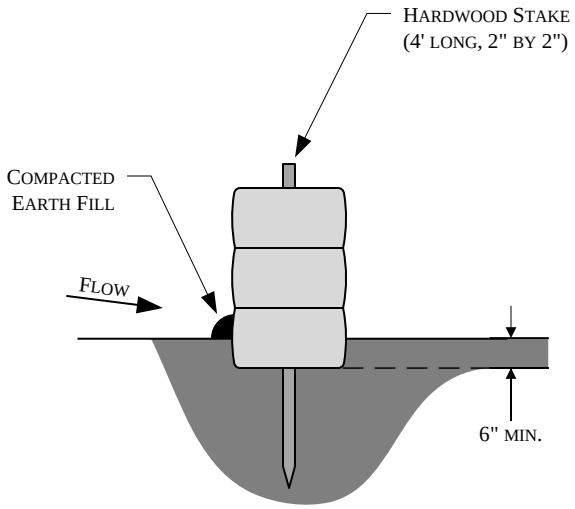

STRAW BALES ONLY

ENBRIDGE

Figure 5

Environmental Protection Plan

Typical Straw Bale Installation

Scale: NTS
Date: 10/28/2016
Revised: 3/21/2017
Location: M:\Department Tasks\EPP Figures wBorders\

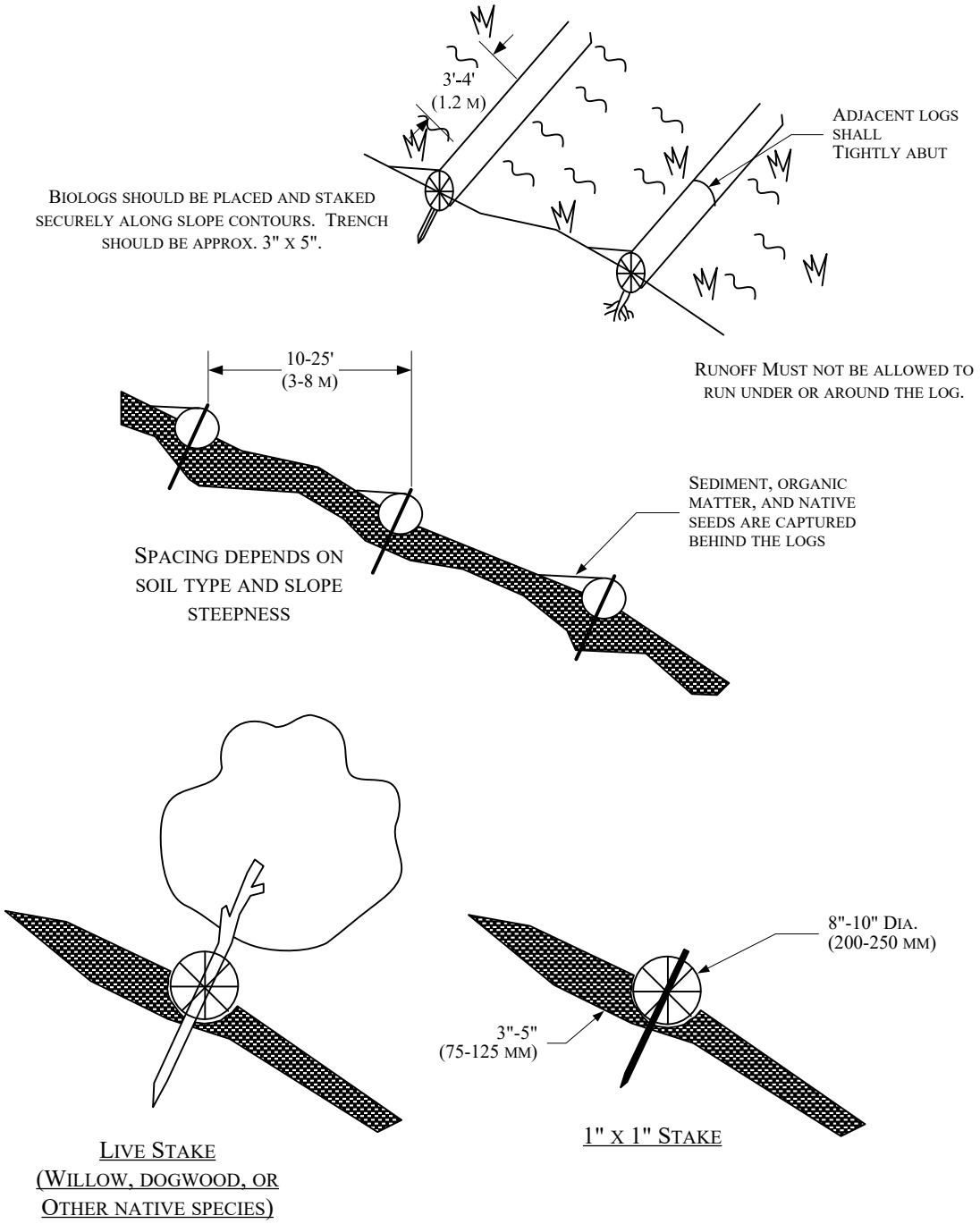

ENBRIDGE

Figure 6

Environmental Protection Plan

Typical Biolog Installation

Scale: NTS
Date: 11/3/2016
Revised: 3/21/2017
Location: M:\Clients\D-F\EEL\BadRiver\Documents\

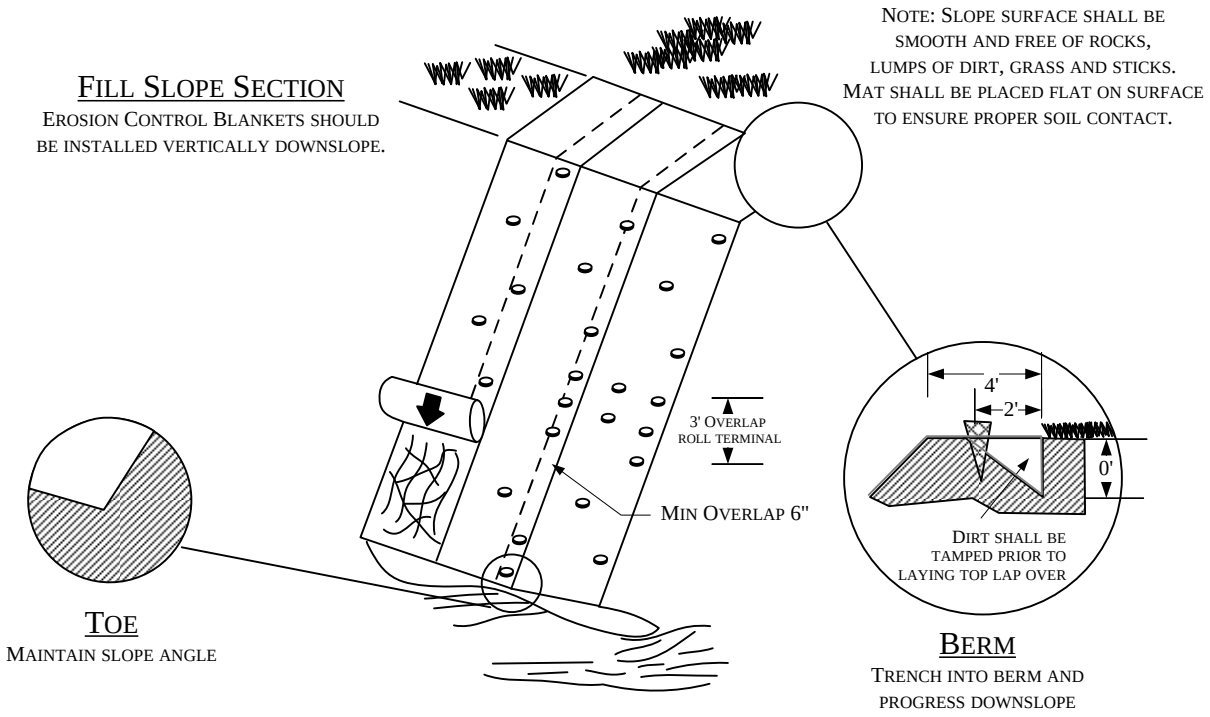

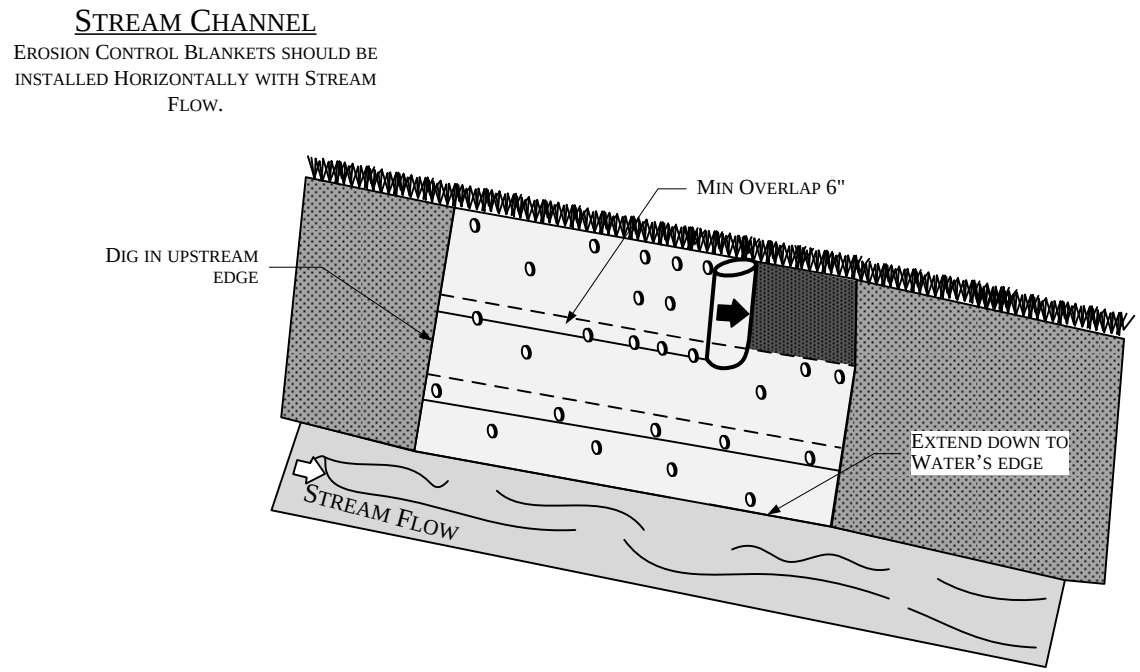

Figure 7

Environmental Protection Plan

Typical Erosion Control Blanket Installation

Scale: NTS	
Date: 11/3/2016	
Revised: 3/21/2017	
Location: M:\Department Tasks\EPP Figures wBorders\	

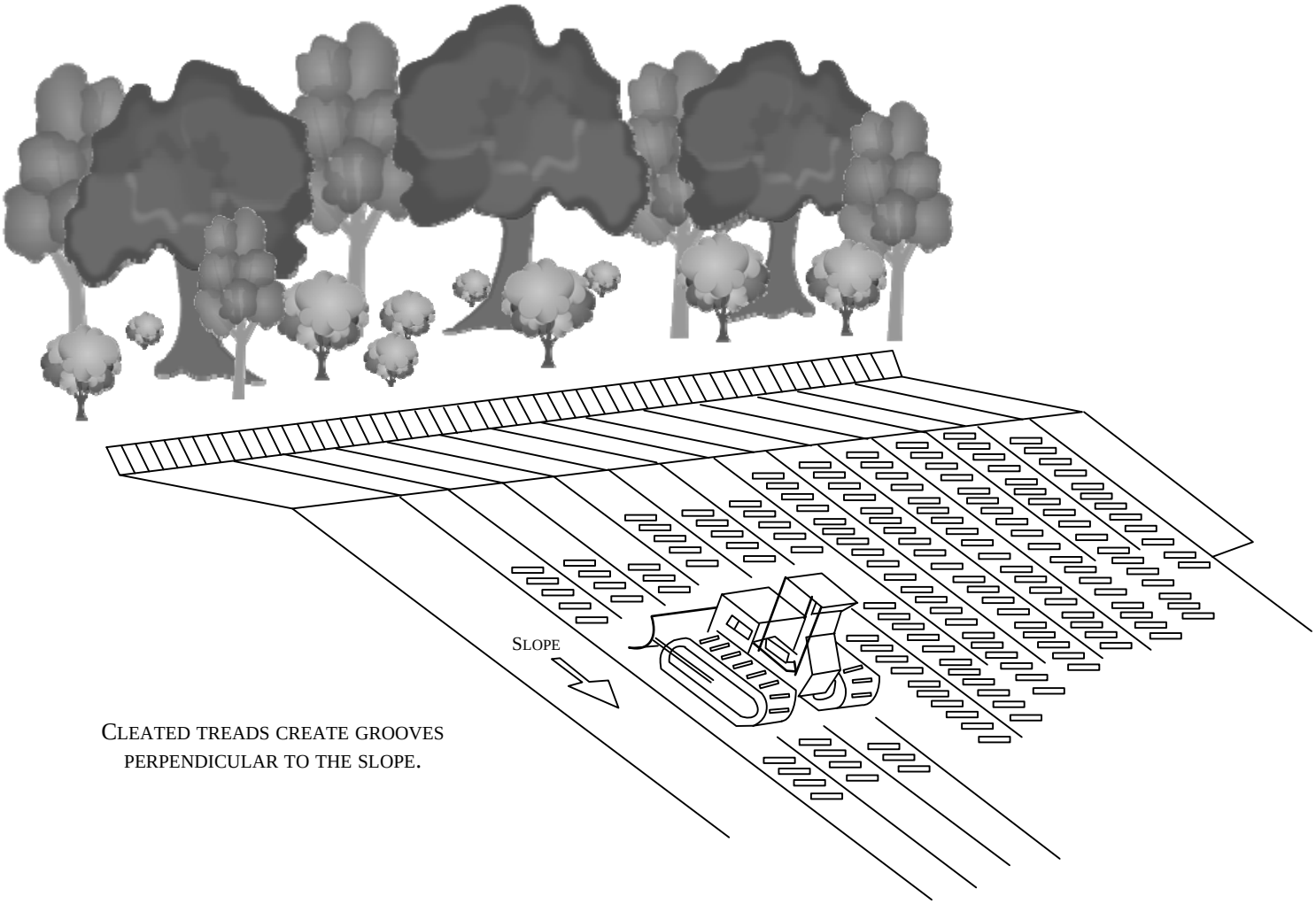

Figure 8

Environmental Protection Plan

Typical Cat Tracking

Scale: NTS

Date: 11/3/2016

Revised: 3/21/2017

Location: M:\Department Tasks\EPP Figures wBorders\

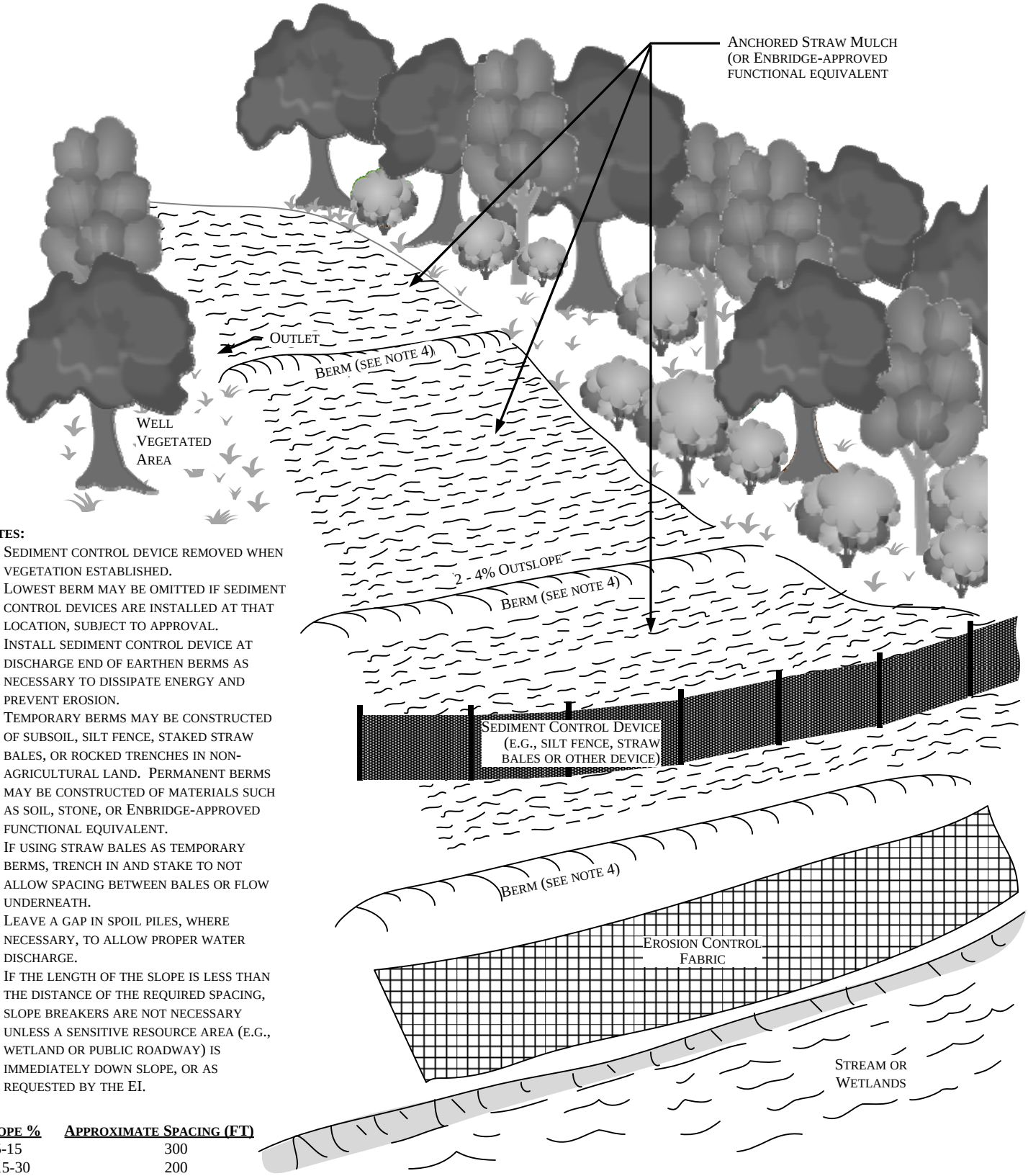

Notes:

1. Sediment control device removed when vegetation established.
2. Lowest berm may be omitted if sediment control devices are installed at that location, subject to approval.
3. Install sediment control device at discharge end of earthen berms as necessary to dissipate energy and prevent erosion.
4. Temporary berms may be constructed of subsoil, silt fence, staked straw bales, or rocked trenches in non-agricultural land. Permanent berms may be constructed of materials such as soil, stone, or Enbridge-approved functional equivalent.
5. If using straw bales as temporary berms, trench in and stake to not allow spacing between bales or flow underneath.
6. Leave a gap in spoil piles, where necessary, to allow proper water discharge.
7. If the length of the slope is less than the distance of the required spacing, slope breakers are not necessary unless a sensitive resource area (e.g., wetland or public roadway) is immediately down slope, or as requested by the EI.

Slope %	Approximate Spacing (ft)
5-15	300
>15-30	200
>30	100

ENBRIDGE

Figure 9

Environmental Protection Plan

Typical Temporary or Permanent Berms (Perspective View)

Scale: NTS

Date: 11/14/2000

Revised: 3/21/2017

Location: M:\Department Tasks\EPP Figures wBorders\

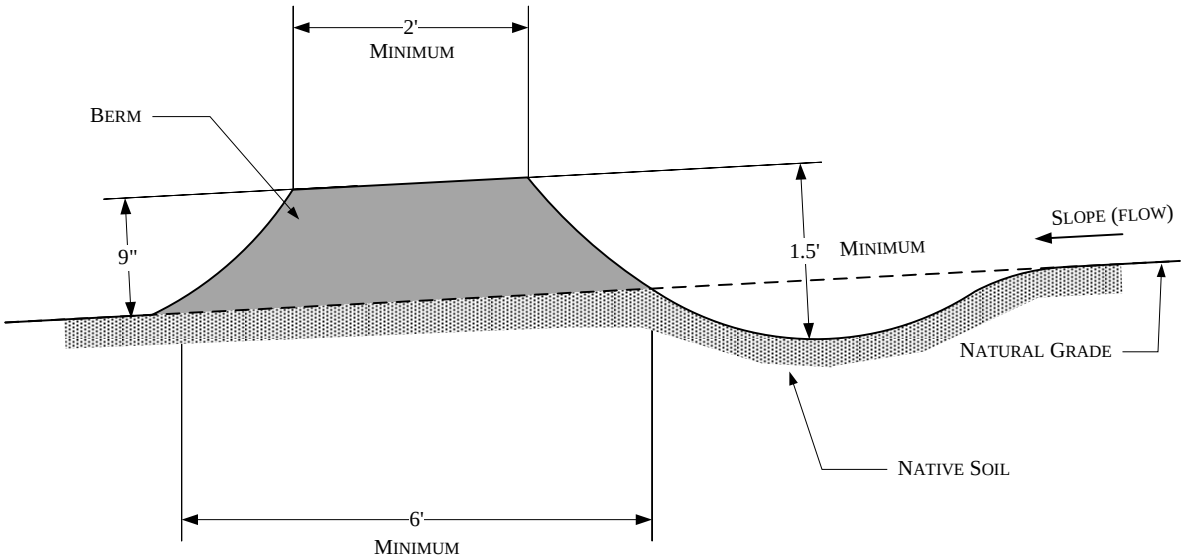

NOTES

1. BERMS SHALL BE CONSTRUCTED WITH 2 TO 4 PERCENT OUTSLOPE.
2. BERMS SHALL BE OUTLETED TO WELL-VEGETATED STABLE AREAS, SEDIMENT CONTROL DEVICES OR ROCK APRONS.
3. BERMS SHALL BE SPACED AS DESCRIBED IN CONSTRUCTION SPECIFICATIONS.
4. ADDITIONAL INFORMATION INCLUDED ON OTHER DRAWINGS.
5. DIMENSIONS ARE GUIDELINES AND MAY BE MODIFIED SUBJECT TO FIELD CONDITIONS.

ENBRIDGE

Figure 10

Environmental Protection Plan

Typical Temporary or Permanent Berms (Elevation View)

Scale: NTS

Date: 11/14/2000

Revised: 3/21/2017

Location: M:\Department Tasks\EPP Figures wBorders\

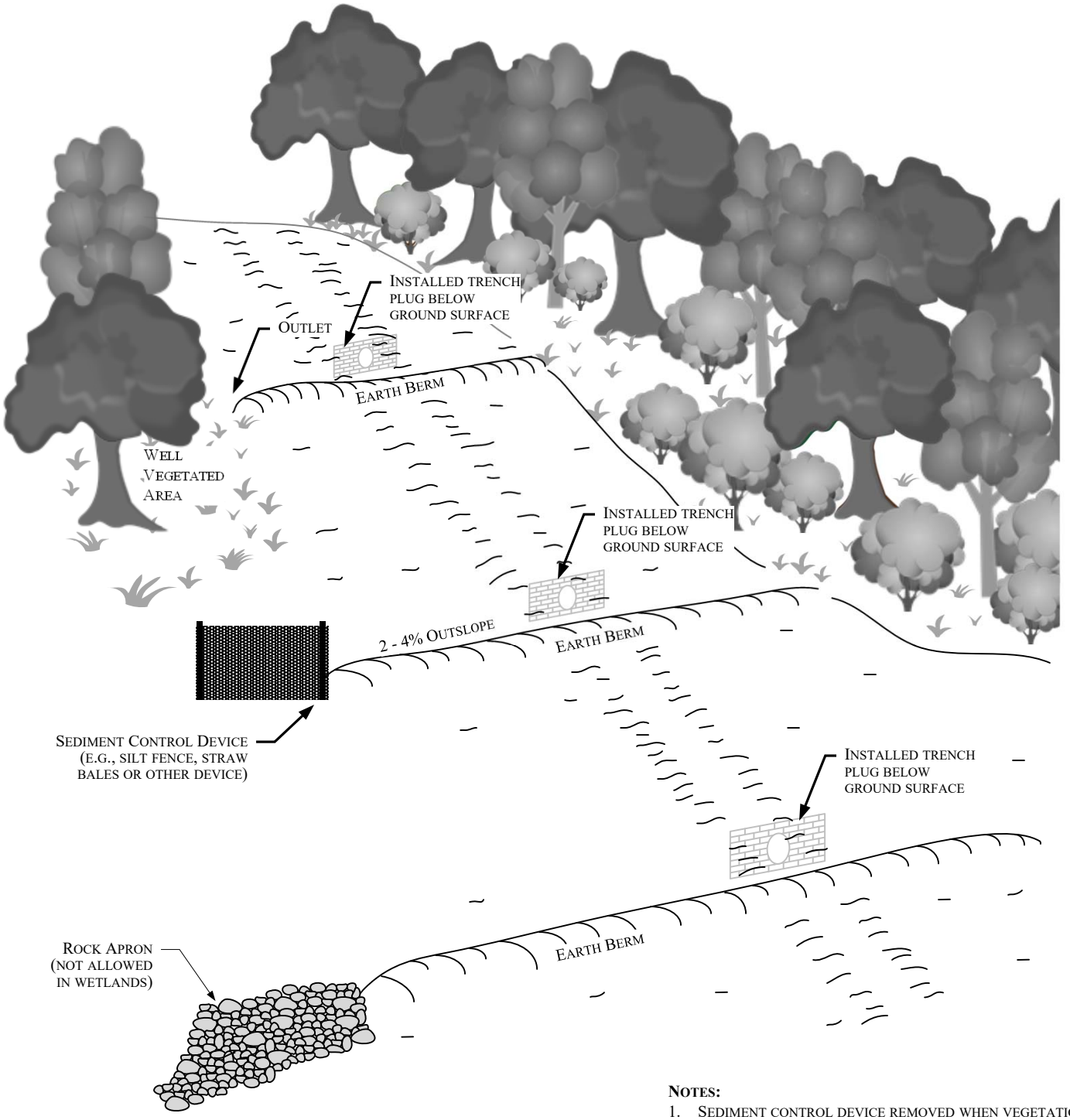

Slope %	Approx. Spacing (ft)
3-5	250
5-15	200
15-25	150
>25	<100

Notes:

1. Sediment control device removed when vegetation established.
2. Lowest berm may be omitted if sediment control devices are installed at that location, subject to approval.
3. Install sediment control devices at discharge end of earthen berms as necessary to dissipate energy and prevent erosion.

ENBRIDGE

Figure 11

Environmental Protection Plan

Permanent Slope Breakers (Perspective View)

Scale: NTS

Date: 11/14/2000

Revised: 3/3/2017

Location: M:\Clients\D-F\EEL\BadRiver\Documents\

Plan View

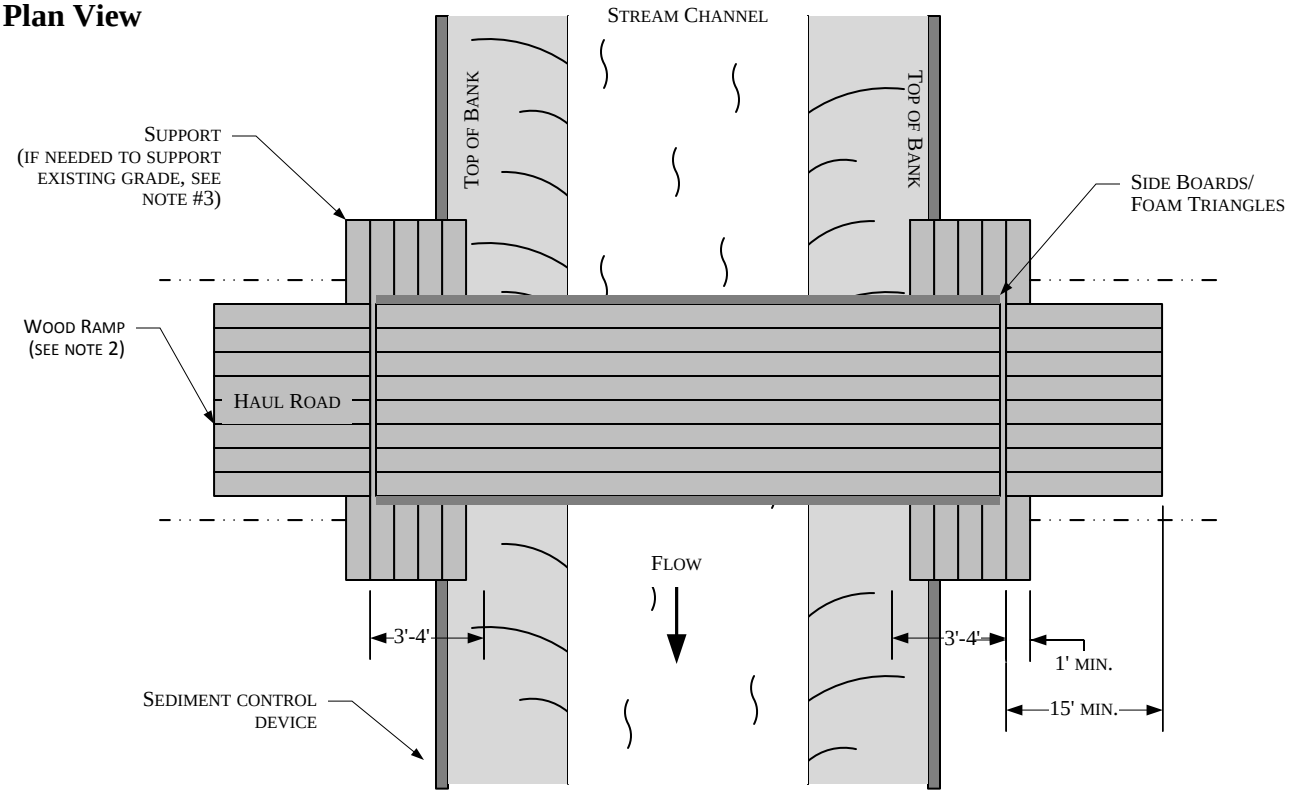

Profile View

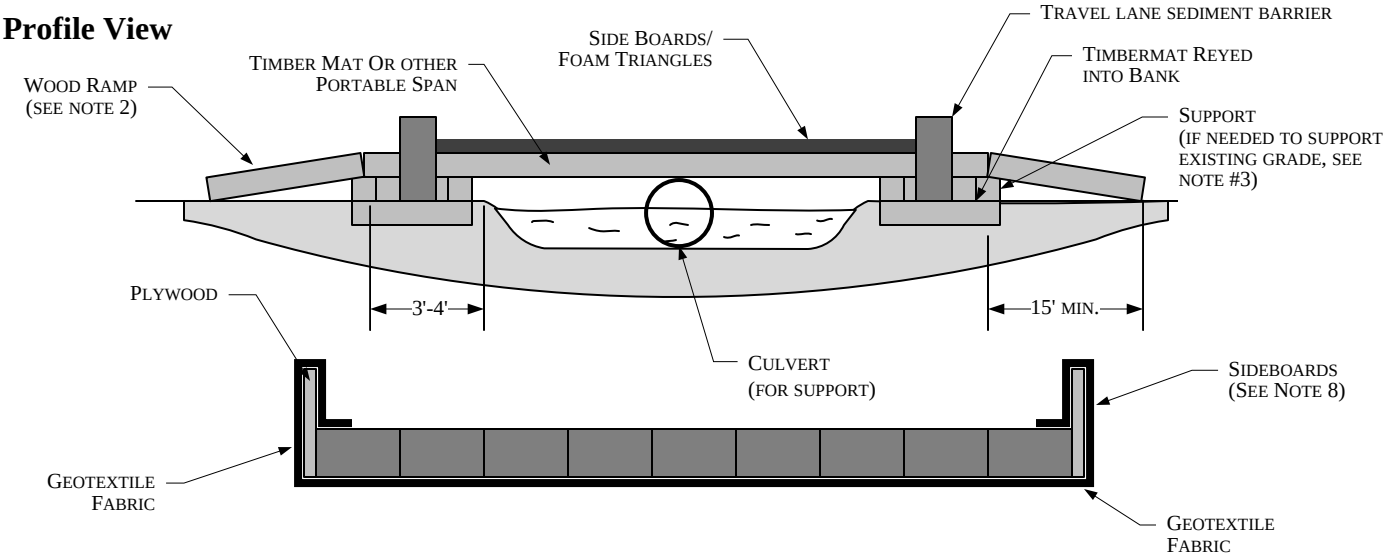

NOTES:

1. INSPECT BRIDGE OPENING PERIODICALLY AND FOLLOWING RAINFALLS OF OVER ½". REMOVE ANY DEBRIS RESTRICTING FLOW AND DEPOSIT IT AT AN UPLAND SITE OUTSIDE OF FLOODPLAIN.
2. IF PHYSICAL CIRCUMSTANCES PROHIBIT WOOD OR METAL RAMPS, EARTHEN RAMPS MAY BE USED AS APPROVED BY ENBRIDGE.
3. INSPECT BRIDGE ELEVATION SO BRIDGE REMAINS SUPPORTED ABOVE OHWM AND DOES NOT SINK INTO BANK.
4. THE CULVERT SUPPORT MUST BE ANCHORED TO THE STREAM BOTTOM AND MAY NOT BE SUPPORTED WITH FILL.
5. EARTHEN RAMP CANNOT BE TALLER THAN 1' AND CANNOT EXTEND FOR MORE THAN 15' ON EITHER SIDE OF THE CROSSING.
6. THE BRIDGE MUST SPAN FROM TOP OF OHWM.
7. ADDITIONAL SUPPORT MUST BE ADDED ON TOP OF BANK AND UNDER SPAN IF INITIAL SUPPORT STARTS TO SETTLE.
8. SIDEBOARDS WILL BE INSTALLED ON TEMPORARY BRIDGES TO MINIMIZE THE POTENTIAL FOR SEDIMENT TRANSPORT. SIDEBOARDS MAY BE CONSTRUCTED OUT OF PLYWOOD, OR EQUIVALENT, AND AFFIXED TO THE OUTER SIDES OF THE BRIDGE. GEO-TEXTILE FABRIC, OR EQUIVALENT, MUST ALSO BE ADEQUATELY SECURED TO THE UNDERSIDE OF THE BRIDGE TO PREVENT MATERIAL FROM FALLING THROUGH THE BRIDGE DECK. THE GEO-TEXTILE FABRIC OR AN EQUIVALENT SHOULD BE SECURED TO THE BOTTOM OF THE BRIDGE AND WRAPPED AROUND THE SIDEBOARDS IN A CONTINUOUS FASHION.

ENBRIDGE

Figure 12

Environmental Protection Plan

Typical Span Type Bridge
With or Without Instream Support

Scale: NTS
Date: 11/16/2016
Revised: 3/21/2017
Location: M:\Department Tasks\EPP Figures wBorders\

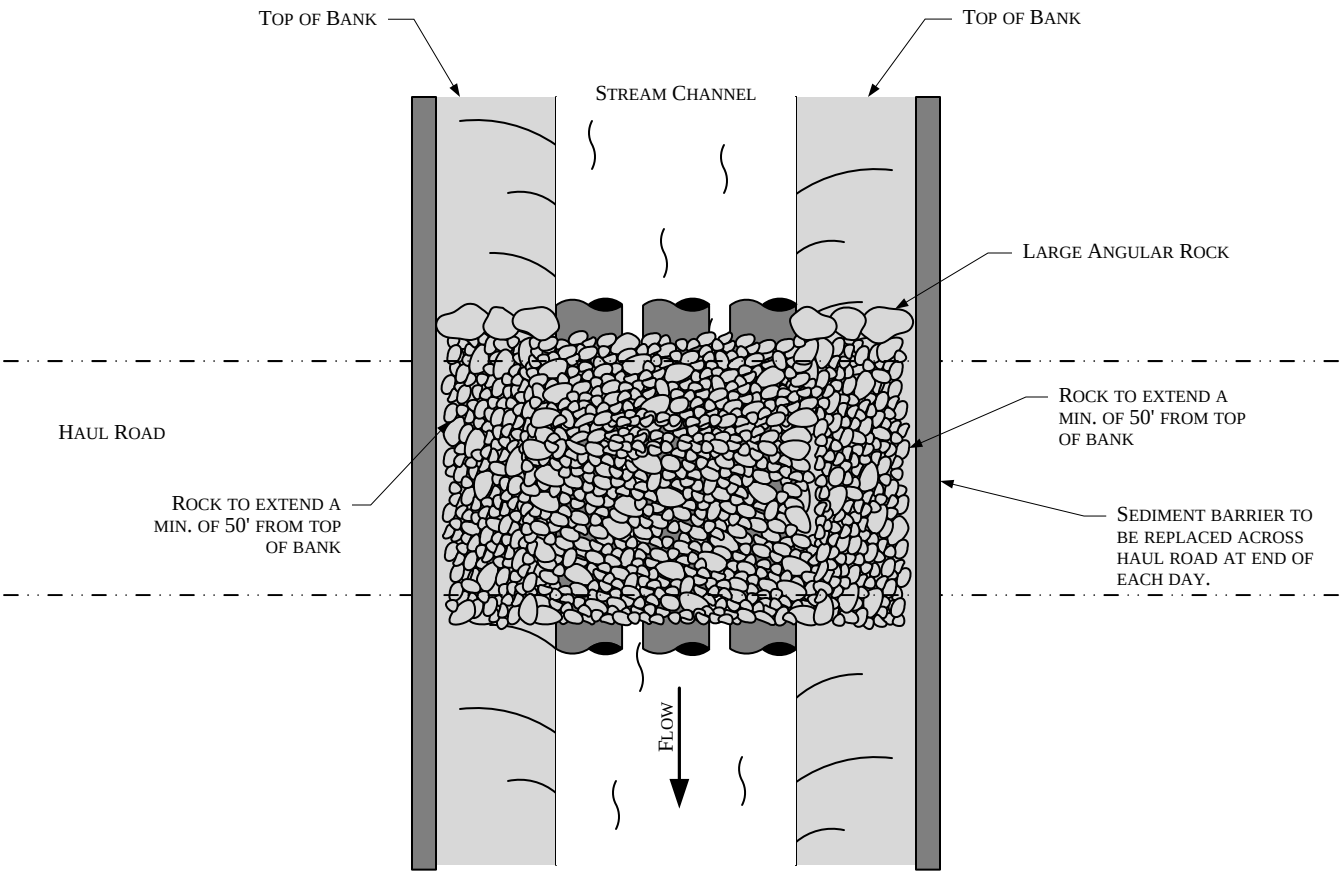

Plan View
(not to scale)

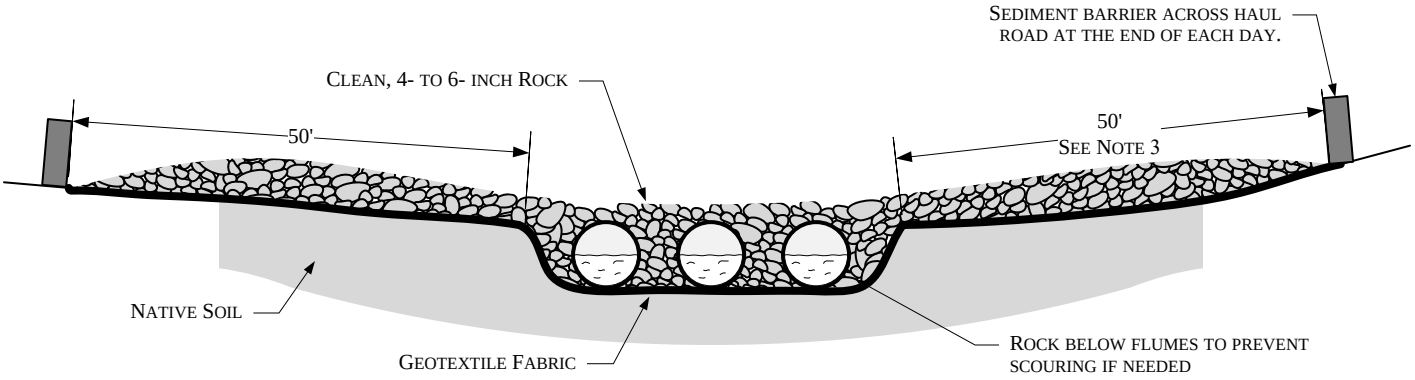

NOTES:

1. Steel flume pipe(s) sized to allow for stream flow and equipment load.
2. Sediment barrier shall be placed across bridge entrance every night.
3. Not permissible in agricultural fields.

ENBRIDGE

Figure 13

Environmental Protection Plan

Typical Rock Flume Bridge

Scale: NTS
Date: 11/18/2016
Revised: 12/13/2019
Location: M:\Department Tasks\EPP Figures wBorders\

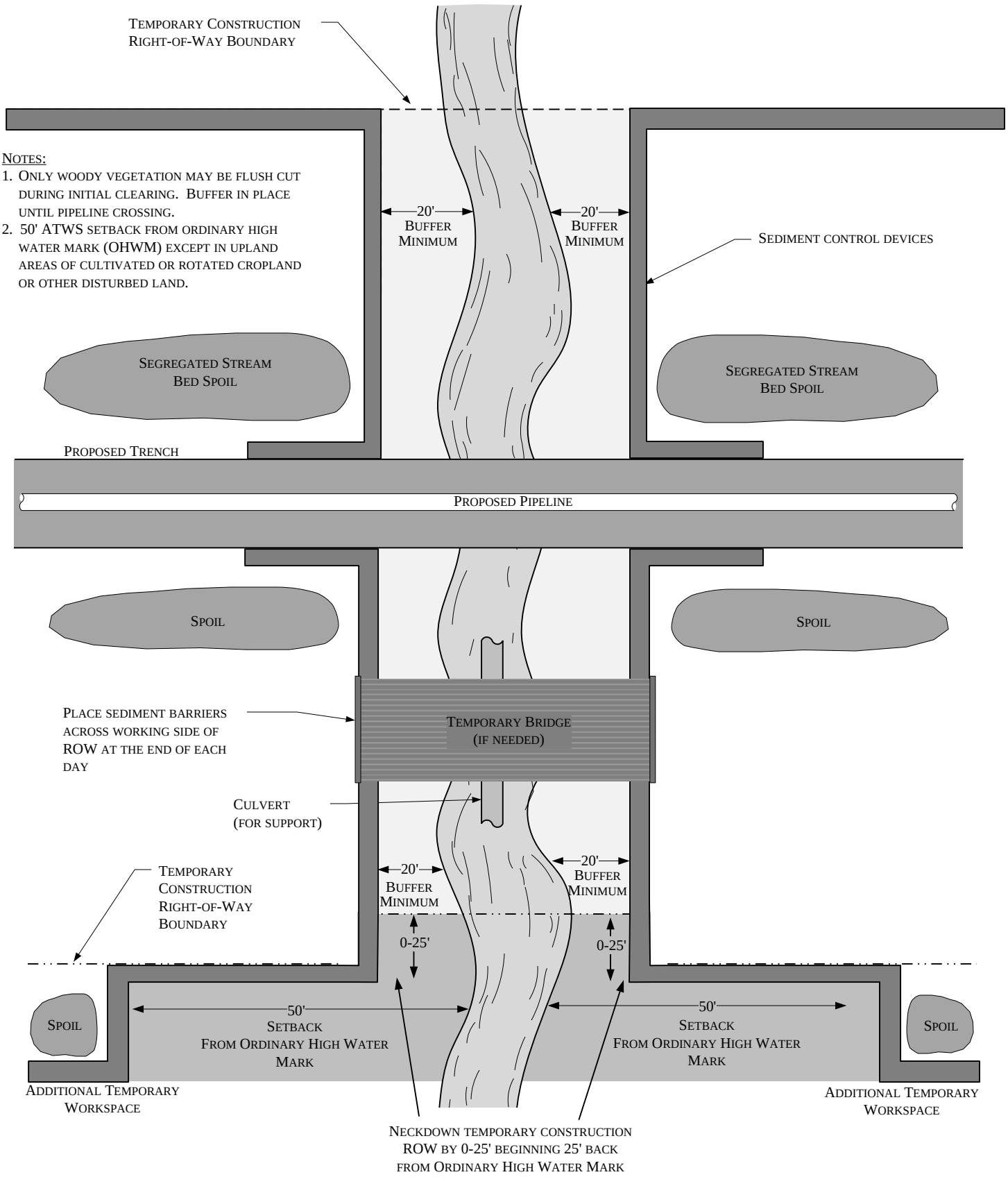

ENBRIDGE

Figure 14

Environmental Protection Plan

Typical Waterbody Crossing Method

Open-Cut Wet Trench Method

Scale: NTS
Date: 11/14/2000
Revised: 3/21/2017
Location: M:\Department Tasks\EPP Figures wBorders\

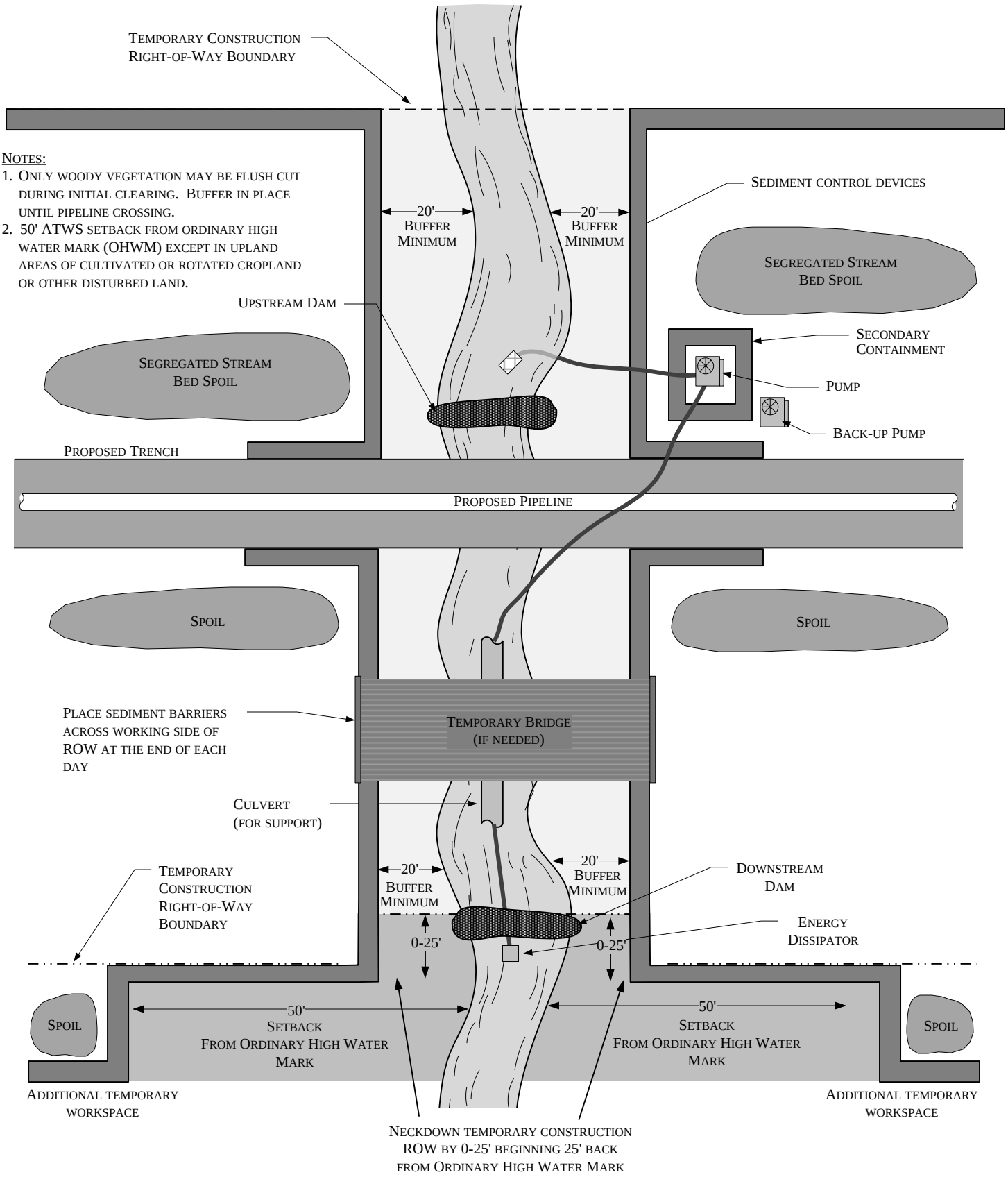

ENBRIDGE

Figure 15

Environmental Protection Plan

Typical Waterbody Crossing Method
Dam and Pump Method

Scale:	NTS
Date:	11/14/2000
Revised:	3/21/2017
Location:	M:\Department Tasks\EPP Figures wBorders\

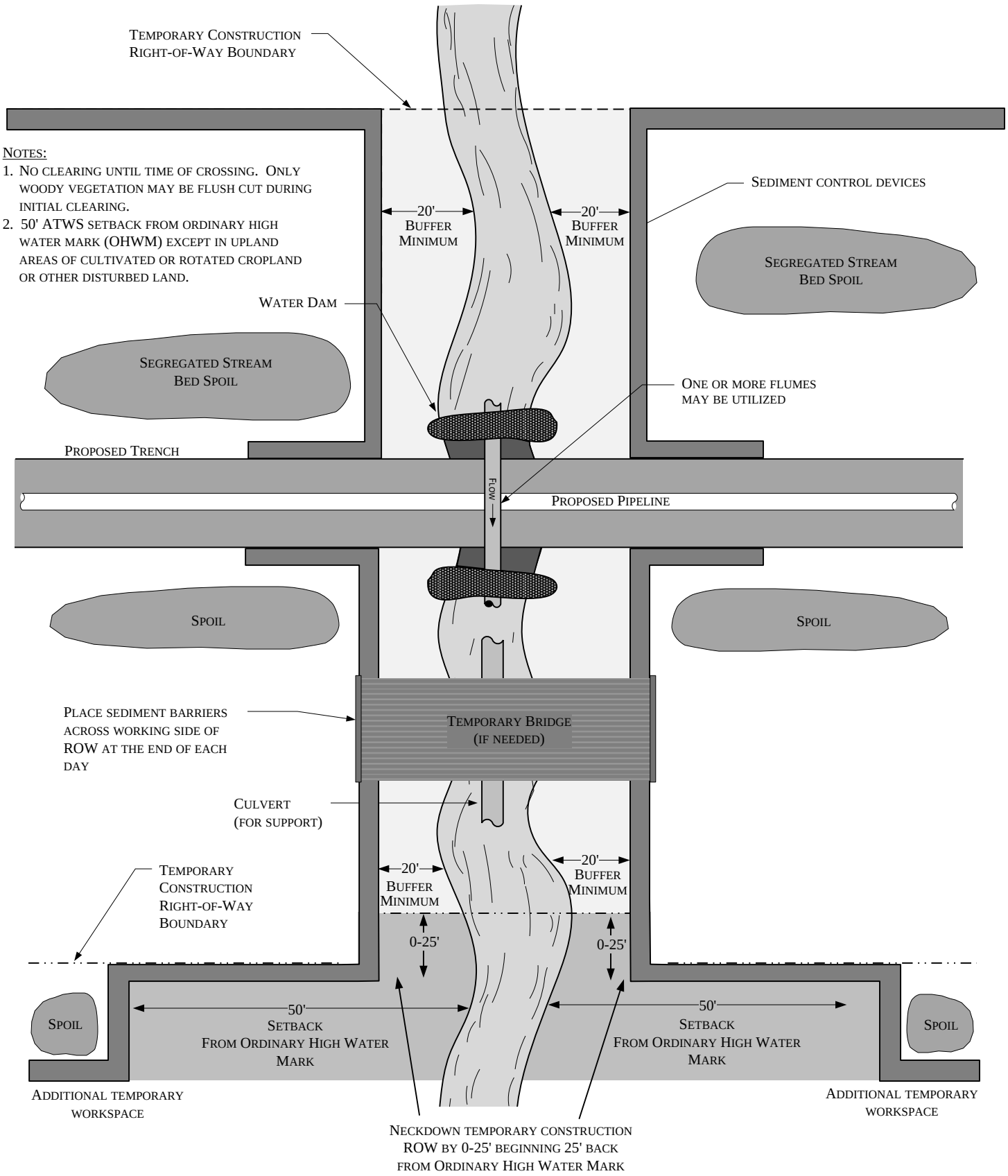

Figure 16

Environmental Protection Plan

Typical Waterbody Crossing Method

Flume Method

Scale: NTS

Date: 11/14/2000

Revised: 3/21/2017

Location: M:\Department Tasks\EPP Figures wBorders\

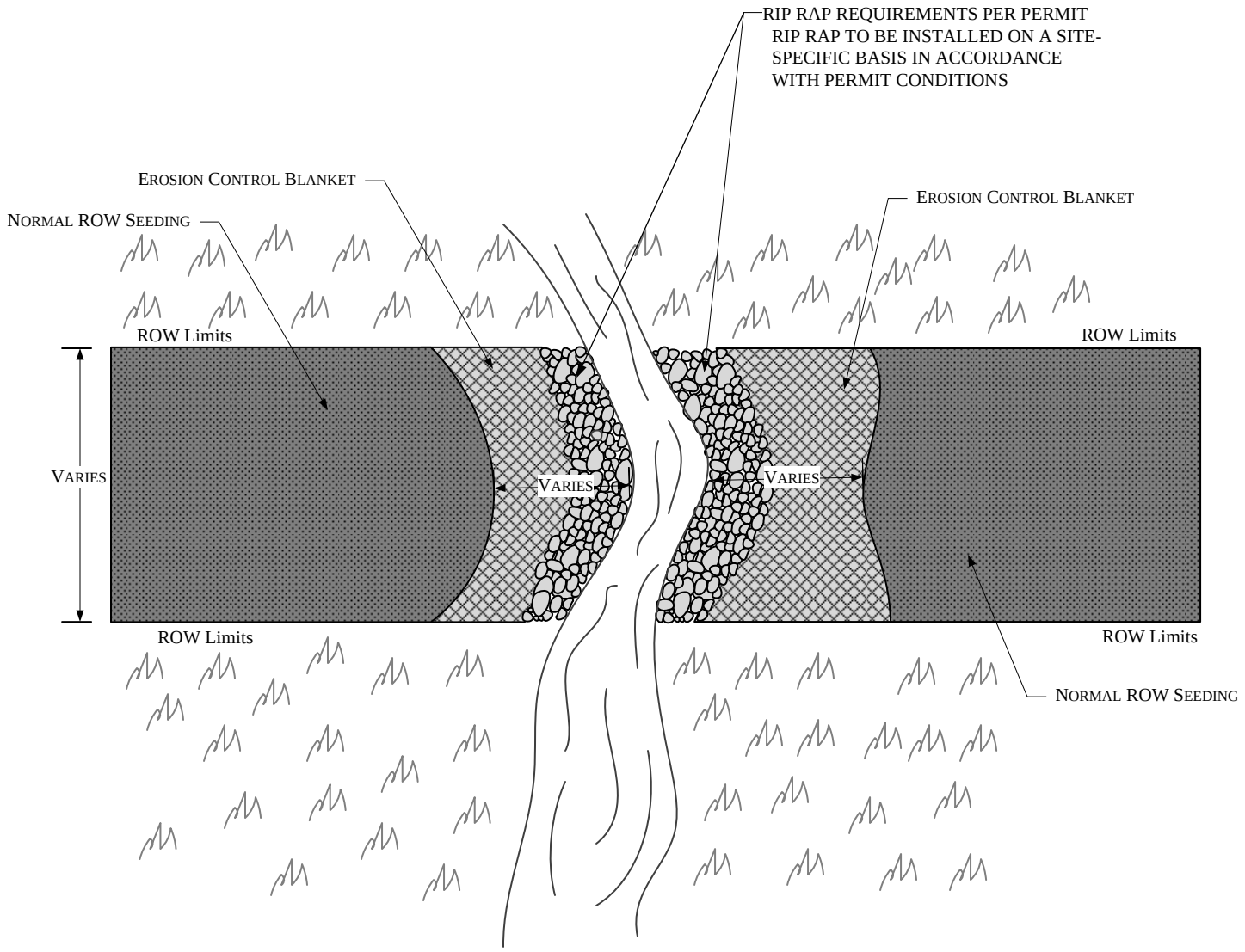

NOTE:
PLACE BLANKET A MINIMUM OF ONE (1) FOOT UNDER RIP RAP. EXTEND BLANKET FROM MEAN HIGH WATER LEVEL TO SEVERAL FEET BEHIND HIGH BANK.

ENBRIDGE

Figure 17
Environmental Protection Plan
Typical Final Stream Bank Stabilization
Rip Rap & Erosion Control

Scale: NTS
Date: 11/30/2016
Revised: 3/21/2017
Location: M:\Department Tasks\EPP Figures wBorders\

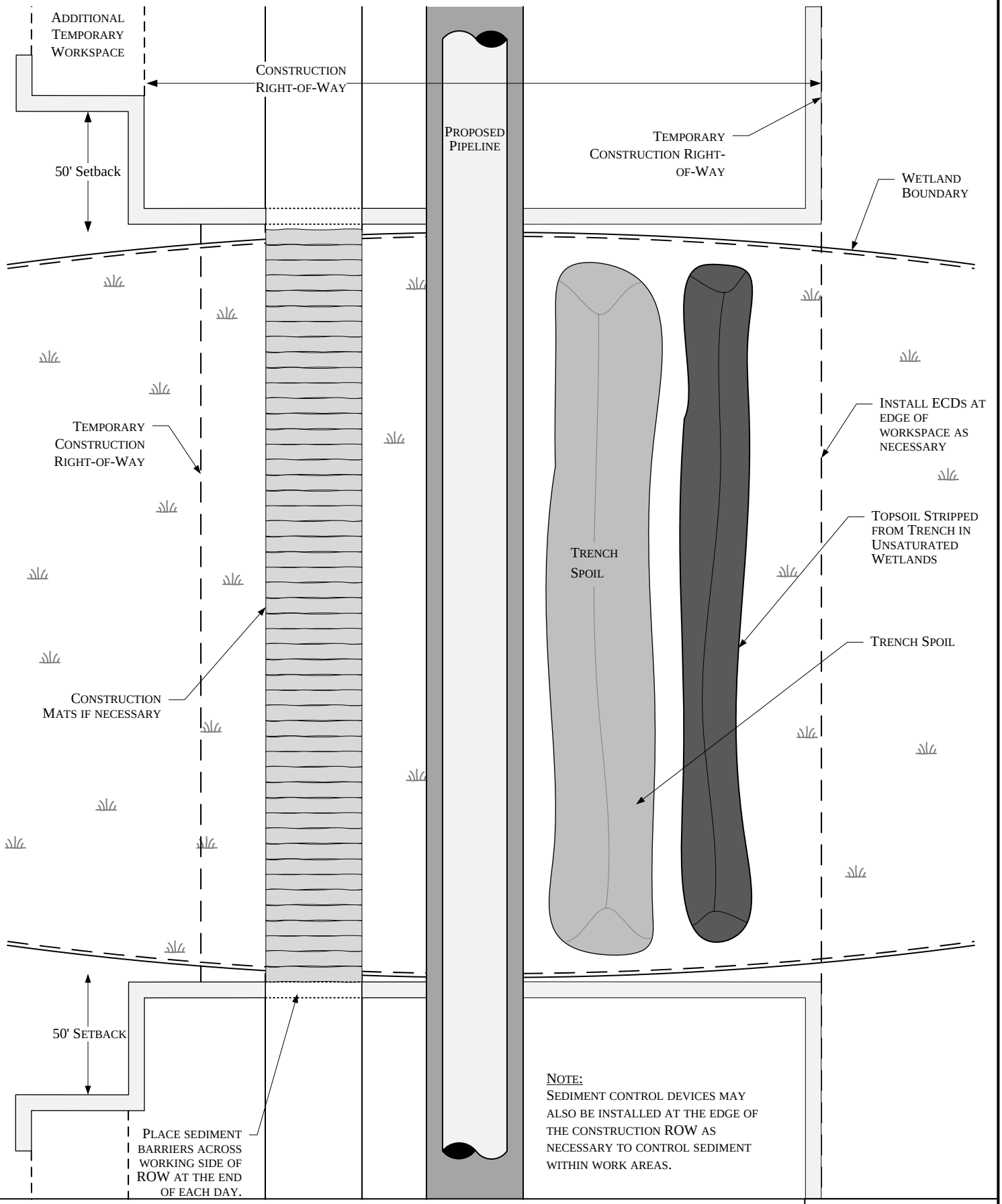

ENBRIDGE

Figure 18

Environmental Protection Plan

Typical Wetland Crossing Method

Scale: NTS

Date: 12/1/2016

Revised: 3/21/2017

Location: M:\Department Tasks\EPP Figures wBorders\

Dewatering Discharge in Well Vegetated Uplands

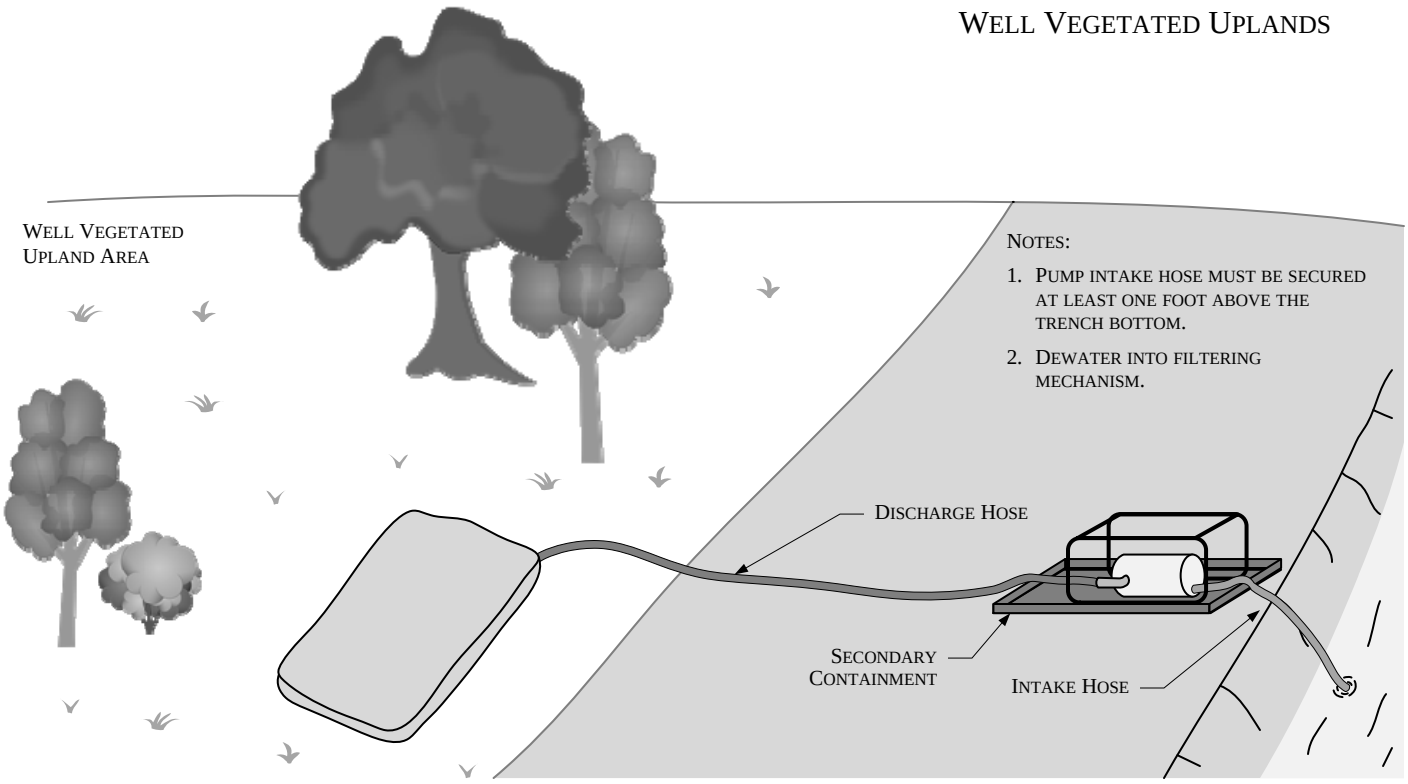

Geotextile Filter Bag

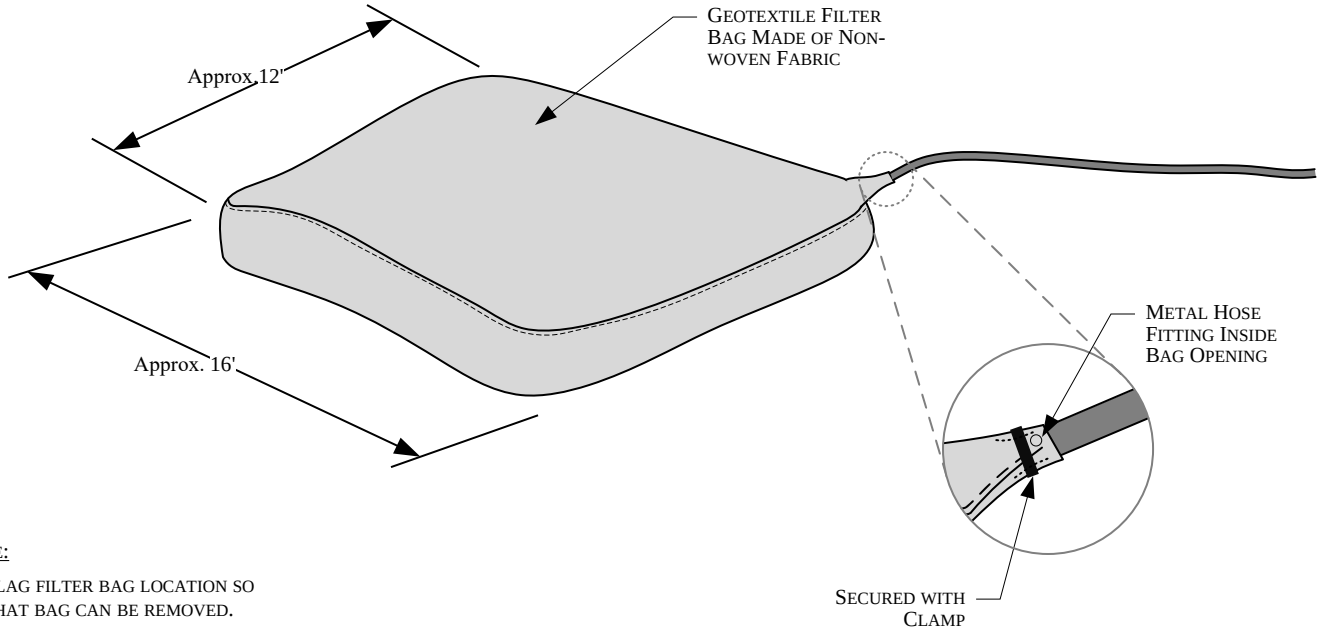

Note:

1. Flag filter bag location so that bag can be removed.

ENBRIDGE

Figure 19

Environmental Protection Plan

Typical Dewatering Measures

Scale:	NTS
Date:	11/21/2016
Revised:	12/13/2019

Location: M:\Department Tasks\EPP Figures wBorders\

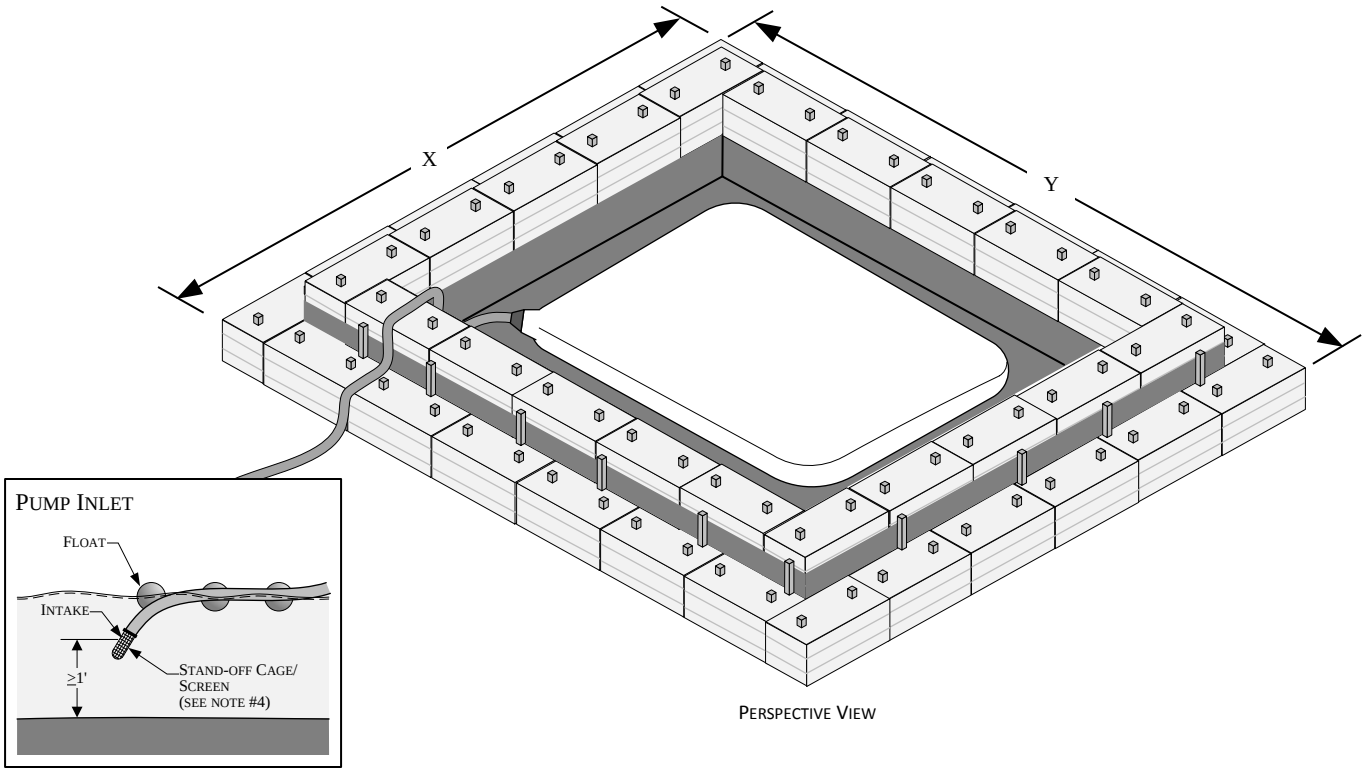

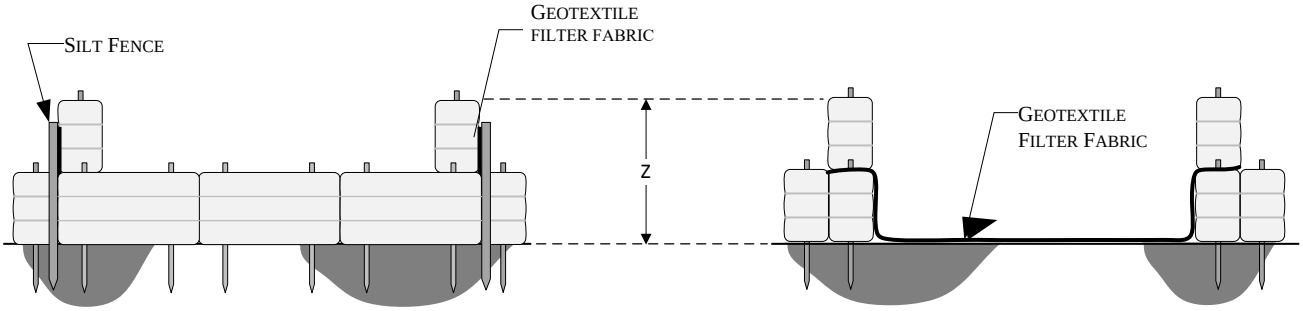

OPTION 1

OPTION 2

DEWATERING STRUCTURE SIZING GUIDANCE

PUMP SIZE	TYPICAL PUMP RATES GALLONS PER MINUTE (GPM)[1]	CONTINUOUS DISCHARGE RATE GPM	MINIMUM STRUCTURE CAPACITY X*Y*Z = CUBIC FEET
1.5-INCH	90-120	100	1600
2-INCH	90-300	150	2400
3-INCH	300-800	200	3200
4-INCH	400-1300	250	4000
6-INCH	400-1800	300	4800
		350	5600
		400	6400

[1]BASED ON MANUFACTURERS' GENERAL INFORMATION; CHECK PUMP MANUAL FOR MORE INFORMATION.

NOTES:

1. ARRANGE THE STRAW BALES TO THE X AND Y DIMENSIONS REQUIRED TO ACCOMMODATE ANTICIPATED PUMPING RATES. SEE DEWATERING STRUCTURE SIZING GUIDANCE.
2. LINE ENTIRE STRUCTURE WITH GEOTEXTILE FILTER FABRIC.
3. SILT FENCE ENDS MUST BE WRAPPED TO JOIN TWO SECTIONS - OPTION 1.
4. INSTALL SILT FENCE 2-INCHES ABOVE TOP OF STRAW BALE, AND ANCHOR A MINIMUM OF 8 INCHES STRAIGHT DOWN - OPTION 1.
5. SILT FENCE POST STAKING MUST BE 4-FEET OR LESS - OPTION 1.
6. DEWATERING INTAKE HOSE MUST BE SUPPORTED AT LEAST 1-FOOT FROM BOTTOM OF TRENCH BEING DEWATERED.
7. FILTER BAG WITHIN THE BASIC STRUCTURE IS OPTIONAL BASED ON SITE-SPECIFIC PARAMETERS AND/OR CONSTRAINTS - OPTION 2.

ENBRIDGE

Figure 20

Environmental Protection Plan

Straw Bale Dewatering Structure

Scale: NTS

Date: 11/23/2016

Revised: 12/13/2019

Location: M:\Department Tasks\EPP Figures wBorders\

Appendix A
Equipment Cleaning Log

Equipment Cleaning Log

Form Completed By: _____

Date: _____ Time: _____

Location of Equipment (tract & milepost): _____

Equipment Type: _____

Equipment ID (e.g., company, unique ID number): _____

Cleaning Method: (check all that apply)

- ☐ Scrape Down
- ☐ Steam Wash Blow Down (compressed air)
- ☐ Power/Pressure Wash (water)
- ☐ Other (Describe): _____

Comments: _____

_____

_____

_____

_____

Appendix B
Seed Mixes

WISCONSIN SEED MIXES

Based on precipitation and general soil types the following seed mixes will be used in Wisconsin:

Table B-1
WI Seed Mix 1 – Standard Upland Seed Mix

Use: Wisconsin state-wide in upland areas
Seeding Rate: 15.0 pounds/acre PLS drilled or 30.0 pounds/acre PLS broadcast without the companion crop
Double the rate of the companion crop when broadcast seeding
Notes: *Enbridge Environment must approve* substitutions *in advance*

Species: Preferred Varieties (if available)	**Pounds/Acre PLS**	**Percent of Mix**
Perennial Ryegrass	2	17.0
Canada Wild-rye	4	33.0
Switchgrass: unimproved native variety	4	33.0
Timothy	2	17.0
Subtotal	12	100.0[1]
Associated Companion Crop Mix		
Oats for summer seeding; or Winter Wheat for seeding in late fall (dormant) or spring	16	80.0
Annual Ryegrass or Slender Wheat Grass	4	20.0
Companion/Cover Crop Subtotal	20	100.0
GRAND TOTAL (pounds)	**32**	**100.0[1]**

[1] May not equal 100 percent due to rounding

Table B-2
WI Seed Mix 2 – Native Sedge/Wet Meadow Mixture

Use: Wisconsin state-wide in unsaturated Wet Meadow wetland areas
Seeding Rate: See below summary.
Notes: *Enbridge Environment must approve* substitutions *in advance*

Common Name	Botanical Name	Indicator Status	Seeds/oz.	Seeds/ft^2	% of Mix
Brome, fringed	*Bromus ciliata*	*FACW*	10,000	1.5	8.1
Blue-joint grass	*Calamagrostis canadensis*	*OBL*	280,000	8.2	1.6
Wild-rye, Virginia	*Elymus virginicus*	*FACW-*	4,200	3.2	42.3
Manna grass, reed	*Glyceria grandis*	*OBL*	80,000	4.7	3.2
Manna grass, fowl	*Glyceria striata*	*OBL*	160,000	4.7	1.6
Bluegrass, fowl	*Poa palustris*	*FACW+*	118,000	16.7	7.1
Sedge, bottlebrush	*Carex comosa*	*OBL*	30,000	2.2	4.3
Sedge, pointed- broom	*Carex scoparia*	*FACW*	84,000	1.5	1.0
Sedge, tussock	*Carex stricta*	*OBL*	53,000	0.8	0.8
Sedge, Common fox	*Carex stipata*	*OBL*	34,000	2.0	3.2
Sedge, fox	*Carex vulpinoidea*	*OBL*	100,000	5.9	3.2
Rush, slender	*Juncus tenuis*	*FAC*	1,000,000	11.0	0.2
Torry's Rush	*Juncus toryi*	*OBL*	1,600,000	5.9	0.6
Bulrush, green	*Scirpus atrovirens*	*OBL*	460,000	16.9	2.0
Wool grass	*Scirpus cyperinus*	*OBL*	1,700,000	6.2	0.2
Milkweed, marsh	*Asclepias incarnata*	*OBL*	4,800	0.4	5.0
Aster, swamp	*Aster puniceus*	*OBL*	80,000	5.9	4.0
Aster, flat-topped	*Aster umbellatus*	*FACW*	67,000	1.5	1.2
Joe-pye weed	*Eupatorium maculatum*	*OBL*	95,000	0.7	0.4
Boneset	*Eupatorium perfoliatum*	*FACW+*	160,000	1.2	0.4
Goldenrod, grass- leaved	*Euthamia graminifolia*	*FACW-*	350,000	1.0	0.2
Sneezeweed	*Helenium autumnale*	*FACW+*	130,000	0.8	0.3
Sunflower, serrated	*Helianthus grosseserratus*	*FACW-*	15,000	0.2	0.6
Lobelia, great-blue	*Lobelia siphilitica*	*FACW+*	500,000	2.9	0.3
Monkey flower	*Mimulus ringens*	*OBL*	2,300,000	6.8	0.2
Mint, mountain	*Pycnanthemum virginianum*	*FACW+*	220,000	1.3	0.3
Meadow-rue, purple	*Thalicturm dasycarpum*	*FACW*	11,000	0.1	0.4
Vervain, blue	*Verbena hastata*	*FACW+*	93,000	2.2	1.3
Alexanders, Golden	*Zizea aurea*	*FACW*	11,000	1.0	5.0

Recommended Rate: 5.0 (PLS lbs/acre)

SUMMARY

Mix Seeds Per Square Foot	Mix Seeds Per Square Yard	Mix Seeds Per Acre
121	1,093	5,290,320
% by wt. Grasses	**% by wt. Graminoids**	**% by wt. Forbs**
64.0	15.0	21.0
% by Seed Count Grasses	**% by Seed Count Graminoids**	**% by Seed Count Forbs**
32.1	43.2	24.7

Table B-3
WI Seed Mix 3 – Native Wet Prairie Mixture

Use: Wisconsin state-wide in unsaturated Wet Prairie wetland areas
Seeding Rate: See below summary.
Notes: *Enbridge Environment must approve* substitutions *in advance*

Common Name	Botanical Name	Indicator Status	Seeds/oz.	Seeds/ft^2	% of Mix
Bluestem, big	*Andropogon gerardi*	*FAC-*	10,000	3.7	15.3
Brome, fringed	*Bromus ciliata*	*FACW*	10,000	1.8	7.7
Blue-joint grass	*Calamagrostis canadensis*	*OBL*	280,000	6.2	0.9
Wild-rye, Virginia	*Elymus virginicus*	*FACW-*	4,200	2.0	19.9
Manna grass, reed	*Glyceria grandis*	*OBL*	80,000	2.9	1.5
Manna grass, fowl	*Glyceria striata*	*OBL*	160,000	3.5	0.9
Switchgrass	*Panicum virgatum*	*FAC+*	14,000	3.1	9.2
Bluegrass, fowl	*Poa palustris*	*FACW+*	118,000	9.6	3.0
Indian grass	*Sorghastrum nutans*	*FACU+*	12,000	2.0	6.7
Cord grass, prairie	*Spartina pecinata*	*FACW+*	6,600	1.1	6.9
Sedge, tussock	*Carex stricta*	*OBL*	53,000	0.7	0.5
Sedge, fox	*Carex vulpinoidea*	*OBL*	100,000	3.7	1.5
Bulrush, green	*Scirpus atrovirens*	*OBL*	460,000	7.7	0.7
Wool grass	*Scirpus cyperinus*	*OBL*	1,700,000	18.7	0.5
Anemone, Canada	*Anemone canadensis*	*FACW*	8,000	0.09	0.5
Milkweed, marsh	*Asclepias incarnata*	*OBL*	4,800	0.1	1.4
Aster, swamp	*Aster puniceus*	*OBL*	80,000	2.4	1.2
Aster, flat-topped	*Aster umbellatus*	*FACW*	67,000	1.5	0.9
Tic-trefoil, showy	*Desmodium canadense*	*FAC-*	5,500	0.8	6.1
Joe-pye weed	*Eupatorium maculatum*	*OBL*	95,000	1.7	0.8
Boneset	*Eupatorium perfoliatum*	*FACW+*	160,000	2.4	0.6
Goldenrod, grass- leaved	*Euthamia graminifolia*	*FACW-*	350,000	2.0	0.3
Sneezeweed	*Helenium autumnale*	*FACW+*	130,000	2.39	0.8
Sunflower, serrated	*Helianthus grosseserratus*	*FACW-*	15,000	0.3	0.7
Blazingstar, tall	*Liatris pycnostachya*	*FAC-*	11,000	0.1	0.5
Lobelia, great-blue	*Lobelia siphilitica*	*FACW+*	500,000	1.4	0.1
Monkey flower	*Mimulus ringens*	*OBL*	2,300,000	6.4	0.1
Mint, mountain	*Pycnanthemum virginianum*	*FACW+*	220,000	1.2	0.3
Vervain, blue	*Verbena hastate*	*FACW+*	93,000	1.0	0.5
Ironweed	*Veronia fasciculate*	*FACW*	24,000	0.1	0.3
Culver's root	*Veronicastrum virginicum*	*FAC*	800,000	8.8	0.5
Alexander's, golden	*Zizea aurea*	*FAC+*	11,000	2.4	9.2

Recommended Rate: 5.0 (PLS lbs/acre)

SUMMARY

Mix Seeds Per Square Foot	Mix Seeds Per Square Yard	Mix Seeds Per Acre
102	884	4,436,283
% by wt. Grasses	**% by wt. Graminoids**	**% by wt. Forbs**
72.0	3.0	24.0
% by Seed Count Grasses	**% by Seed Count Graminoids**	**% by Seed Count Forbs**
35.0	30.0	35.0

Table B-4
WI Seed Mix 4 - Waterbody Banks Seed Mix

Use: Wisconsin state-wide on waterbody banks
Seeding Rate: 8.255 pounds/acre PLS drilled or 16.510 pounds/acre PLS broadcast without the companion crop
Double the rate of the companion crop when broadcast seeding
Notes: *Enbridge Environment must approve* substitutions *in advance*

Species: Preferred Varieties (if available)	Pounds/Acre PLS	Percent of Mix
American slough grass: Common	1.500	18.2
Blue-joint grass: Common	0.100	1.2
Reed manna grass: Common	0.200	2.4
Fowl manna grass: Common	0.100	1.2
Fowl bluegrass: Common	1.800	21.8
Rice cut-grass: Common	0.250	3.0
Annual ryegrass: Common	0.900	10.9
Tussock sedge: Common	0.100	1.2
Fox sedge: Common	0.300	3.6
Green bulrush: Common	0.100	1.2
Wool grass: Common	0.005	0.1
River bulrush: Common	0.250	3.0
Soft-stem bulrush: Common	0.100	1.2
March milkweed: Common	0.100	1.2
Flat-topped aster: Common	0.300	3.6
Joe-pye weed: Common	0.300	3.6
Boneset: Common	0.250	3.0
Sneezeweed: Common	0.250	3.0
Spotted touch-me-not: Common	0.100	1.2
Great blue lobelia: Common	0.100	1.2
Monkey flower: Common	0.100	1.2
Mountain mint: Common	0.100	1.2
Giant goldenrod: Common	0.250	3.0
Blue vervain: Common	0.350	4.2
Ironweed: Common	0.350	4.2
Total	**8.255**	**100.0**[1]
Companion Crop		
Slender wheatgrass: Adanac, Pryor, Revenue, Primar, First Strike	3.000	100.0
Total Seed	**11.255**	**100.0**[1]

[1] May not equal 100 percent due to rounding

Appendix C
Emergency Response Contractors/Disposal and Treatment Facilities

Emergency Response Contractors/Disposal and Treatment Facilities

The Contractor will dispose of all wastes according to applicable federal, state, and local requirements. A listing of potential Emergency Spill Response Contractors and waste disposal facilities is provided below. This list was developed from state-wide data bases. This list represents firms operating at the time the data base was produced. The Contractor is responsible for verifying if a contractor or facility is currently operating under appropriate permits or licenses. The Contractor is responsible for ensuring wastes are disposed of properly.

Spill Response Contractors		
Company	**City/State**	**Phone Number**
Wisconsin		
REI Engineering, Inc	Wausau, WI	(715) 675-9784 (877) REI-SPIL
WRR Environmental Services	Eau Claire, WI	(800) 727 8760
WIDOT	24-hour Emergency Response number	(800) 943-003
Wisconsin - *The Contractor should consult with the WDNR Northern Regional Spill Coordinator (John Sager: phone (715) 365-8959) for assistance when selecting a spill response contractor.*		

Waste Disposal/Treatment Facilities		
Facility	**City/State**	**Telephone**
Wisconsin		
Waste Management – Ashland Transfer Station	Ashland, WI	(855) 292-6029
Ashland City Landfill	Ashland, WI	(715) 682-9672
J B Disposal Inc	Butternut, WI	(715) 769-3676
Bad River Recycling	Ashland, WI	(715) 682-3771

Please note: Some facilities may have limitations on amounts, types of materials, etc.
*May accept crude oil-impacted soils and/or wastes from oil field exploration and production activities.

Appendix D
Spill Report Form

Spill Report Form

(The Contractor Spill Coordinator must complete this for any spill, regardless of size, and submit the form to the Enbridge Representative within 24 hours of the occurrence)

Date of Spill:_____ Date of Spill Discovery:_____

Time of Spill:_____ Time of Spill Discovery:_____

Name and Title of Discoverer:_____

Type of material spilled and manufacturer's name:_____

Legal Description of spill location to the quarter section:_____

Directions from nearest community:_____

Estimated volume of spill:_____

Weather conditions:_____

Topography and surface conditions of spill site:_____

Spill medium (pavement, sandy soil, water, etc.):_____

Proximity of spill to surface waters: _____

Did the spill reach a waterbody? _____Yes _____No

If so, was a sheen present? _____Yes _____No

Describe the causes and circumstances resulting in the spill:_____

_____

_____

_____

Describe the extent of observed contamination, both horizontal and vertical (i.e., spill-stained soil in a 5-foot radius to a depth of 1 inch): _____

_____

_____

Describe immediate spill control and/or cleanup methods used and implementation schedule: _____

_____

_____

Current status of cleanup actions:_____

Name and Company for the following:

Construction Superintendent:_____

Spill Coordinator:_____

Enbridge Representative:_____

Person Who Reported the Spill:_____

Environmental Inspector:_____

Form completed by:_____Date:_____

Appendix E
Spill Reporting-Agency Contacts

Spill Reporting Contacts			
Agency	**Reporting Criteria**	**When**	**Phone Number**
Federal Contacts			
National Response Center	Release of a hazardous substance in an amount equal to or greater than its reportable quantity under CERCLA Any quantity of discharged oil that violates state water quality standards, causes a film or sheen on the water's surface, or leaves sludge or emulsion beneath the surface	Immediately	(800) 424-8802
Environmental Protection Agency (EPA) Region V, WI	Any quantity of discharged oil that violates state water quality standards, causes a film or sheen on the water's surface, or leaves sludge or emulsion beneath the surface	Immediately	(312) 353-2000
State Contacts			
Wisconsin Department of Natural Resources	>one gallon of gasoline on a pervious surface >5 gallons of petroleum on a pervious surface	Immediately	24-hour Toll Free Hotline for Reporting Spills 1 (800) 943-0003
County Contacts – Wisconsin			
Ashland County Emergency Management	As Needed		Non-Emergency: (715) 682-7023 opt 1
Iron County Emergency Management	As Needed		Stacy Ofstad (715) 561-3266
Bayfield County Emergency Management	As Needed		Jan Victorson, EM Coordinator (715) 373-6113